FM TONE GENERATOR

TX7

TX7

SERVICE MANUAL

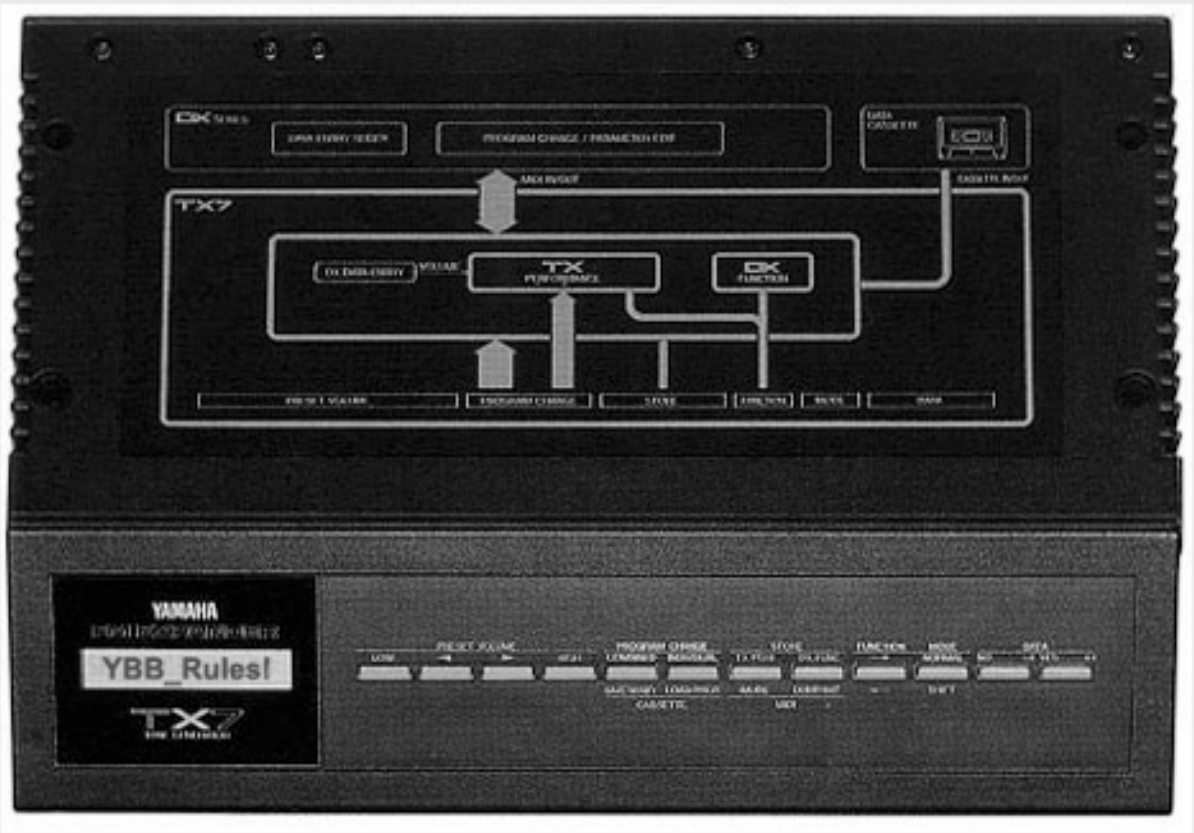

■ CONTENTS

SPECIFICATIONS 1
HOW TO USE THE TX7 2
MIDI DATA FORMAT 9
CONSTRUCTION OF THE TX7 22
TEST PROGRAM 27
DISASSEMBLY INSTRUCTIONS 29
BLOCK DIAGRAM 30
CIRCUIT BOARDS 31
PARTS LIST 34

SINCE 1887 YAMAHA

■ SPECIFICATIONS

Sound Source	FM Tone Generator (6 Operators)	
Simultaneous Ouput Notes	Polyphonic: 16 (first note priority)	
	Monophonic: 1 (last note priority)	
Internal Memory	32 PERFORMANCEs	
	(32 VOICEs + 32 FUNCTIONs),	
	32 DX FUNCTIONs	
Control Panel	PRESET VOLUME	(4)
	PROGRAM CHANGE/CASSETTE	(2)
	STORE/MIDI	(2)
	FUNCTION	(1)
	NORMAL/SHIFT	(1)
	DATA ENTRY	(2)
Display	LCD (16 characters x 1 line)	
Connection Terminals	MIDI IN (DIN JACK 5P)	
	MIDI OUT (DIN JACK 5P)	
	MIDI THRU (DIN JACK 5P)	
	CASSETTE (DIN JACK 8P)	
	OUTPUT (PHONE JACK MONO)	
	HEAD PHONE (PHONE JACK STEREO)	
Power Requirements	US & Canadian models: 120V 50/60Hz	
	General model: 220-240V 50/60Hz	
Power Consumption	US & Canadian models: 12W	
	General model: 10W	
Dimensions (W x H x D)	351 x 50 x 241 mm	
	(13-5/6" x 2" x 9-1/2")	
Weight	2.3 kg (5 lbs. 1 oz.)	

* All specifications are subject to change without notice.

IMPORTANT NOTICE

This manual has been provided for the use of authorized Yamaha Retailers and their service personnel. It has been assumed that basic service procedures inherant to the industry, and more specifically Yamaha Products, are already known and understood by the users, and have therefore not been restated.

WARNING: Failure to follow appropriate service and safety procedures when servicing this product may result in personal injury, destruction of expensive components and failure of the product to perform as specified. For these reasons, we advise all Yamaha product owners that all service required should be performed by an authorized Yamaha Retailer or the appointed service representative.

IMPORTANT: The presentation or sale of this manual to any individual or firm does not constitute authorization, certification, recognition of any applicable technical capabilities, or establish a principle-agent relationshiP of any form.

The data provided is believed to be accurate and applicable to the unit(s) indicated on the cover. The research, engineering, and service departments of Yamaha are continually striving to improve Yamaha products. Modifications are, therefore, inevitable and changes in specification are subject to change without notice or obligation to retrofit. Should any discrepancy appear to exist, please contact the distributor's Service Division.

WARNING: Static discharges can destroy expensive components. Discharge any static electricity your body may have accumulated by grounding yourself to the ground buss in the unit (heavy gauge black wires connect to this buss).

IMPORTANT: Turn the unit OFF during disassembly and parts replacement. Recheck all work before you apply power to the unit.

HOW TO USE THE TX7

1. What is the TX7?

The TX7 is a tone generator module that can be controlled by MIDI signals from the DX series, QX1, CX5 etc. It is the equivalent of the DX7 tone generating section.
When connected to a DX7 or DX9, it can act as a function memory for the DX7 or DX9, and thus allow you to create sounds just like a DX1.

[Features]

- FM tone generation system.
- 16 note polyphonic.
- Internal memory: 32 voice data, 32 function data, stored in pairs. Each voice memory has its own function memory.
- Individual volume and high and low note limits can be set for each voice memory. Also, independently of the voice memory, two volumes may be preset, and recalled instantly by a front panel switch. This can be used for muting.
- Besides the TX7's own 32 voice memories and 32 function memories, it will store 32 function memories for the DX7. This can be used as an extended function memory for the DX7.

2. Memory diagram and flowchart of the TX7

The internal memory structure is shown below.

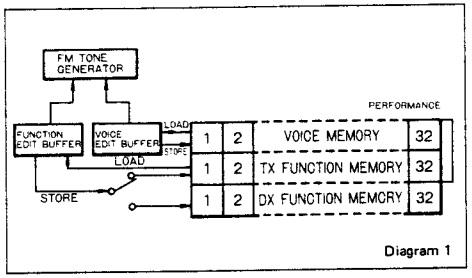

Diagram 1

The internal memory is as follows.

Voice edit buffer
Function edit buffer
32 voice memories
32 function memories
32 DX function memories
Volume, master tune

The voice and function data of the selected memory number is loaded into the voice and function buffers.
Then, the voice and function data is loaded into the FM tone generator, and it is ready to produce sound.
All editing of voice and function data is done on the data in the buffers.
When the store command is executed, the data in the buffers is stored into the respective memories.
The data in the function edit buffer will be stored into the memory that you designate.

3. How the switches work

There are four kinds of switches on the front panel of the TX7. ① Switches to enter volume and data, ② Switches that have different operations when in normal or shift mode, ③ Selector switch normal/shift mode, ④ Switches to set function data.
The operation of switches types ② ~ ④ is shown below.

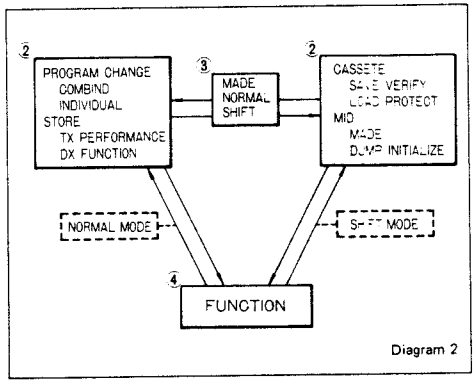

Diagram 2

NORMAL MODE: Program change mode
Store mode
Function mode

SHIFT MODE: Cassette mode
MIDI mode
Function mode

When changing from program change or store modes to cassette or MIDI modes, press MODE switch to change to SHIFT mode. Then press the cassette or MIDI switch.
When changing the other way back to program change or store modes, press MODE switch again to change to NORMAL mode. Then press the program change or store mode switch.

TX7

The diagram below shows the assignment of the TX7's switches. When you press each switch (left), this message will appear (right).

TX7 SWITCH ASSIGNMENTS

SWITCH	LCD DISPLAY
FUNCTION MODE	MASTER TUNE : -64 - 63 PLAY MODE = POLY/MONO PW RNG = 0 - 12 STP = 0 - 12 PORTA When POLY (RTN/FLW) PRT/GLS) 0 - 99 When MONO (FUL/FGO PRT/GLS) 0 - 99 MW = 0 - 15 P(0/1), A 0/2) E(0/1) FC = 0 - 15 P(0/1), A(0/1), E(0/1) BC = 0 - 15 P(0/1), A(0/1), E(0/1) AT = 0 - 15 P(0/1), A(0/1), E(0/1) SP L = 0 - 2 - G8), H = (C-2 - G8) ATTENUATION
NORMAL MODE	
STORE	STR DX 5 FUNCT ? 32 STR TX PERF ? 1 - 32
PROGRAM CHANGE	NO. ? 1 - 32 VOICE NAME CHG ? 32 VOICE NAME
SHIFT MODE	
MIDI	FUNCTION COPY ? EDIT VOICE OUT ? MIDI TRANSMIT ? VOICE INIT ?
	D. ENTRY RCV. (ON/OFF) MIDI RCV. CH. ? - 16 DARK MODE ON/OFF D. ENTRY VOL. ON/OFF CTL CHNG RCV. ON/OFF
CASSETTE	MEM. PROTECT (ON/OFF) LOAD FUNC? INT/EXT LOAD CASSETTE?
	SAVE NUMBER ? 0 - 127 SAVE FUNC? INT/EXT SAVE "APE" TX = SAVE NUMBER VERIFY CASSETTE?

The list below shows the abbreviations used with the TX7, and their full meaning.

TX7 ABBREVIATIONS

FUNCTION MODE	
PW RNG = (0 - 12), STP = (0 - 12)	: PITCH BEND WHEEL RANGE = (0 - 12), STEP = (0 - 12)
PORTA (RTN/FLW) (PRT/GLS)	: PORTAMENTO (RETAIN/FOLLOW), (PORTAMENTO/GLISSANDO)
PORTA (FUL/FGO) (PRT/GLS)	: PORTAMENTO (FULL TIME/FINGERED), (PORTAMENTO/GLISSANDO)
MW = (0 - 15), P(0/1), A(0/1), E(0/1)	: MODULATION WHEEL RANGE = (0 - 15), PITCH (OFF/ON), AMPLITUDE (OFF/ON), EG BIAS (OFF/ON)
FC = (0 - 15), P(0/1), A(0/1), E(0/1)	: FOOT CONTROLLER RANGE = (0 - 15), PITCH (OFF/ON) AMPLITUDE (OFF/ON), EG BIAS (OFF/ON)
BC = (0 - 15), P(0/1), A(0/1), E(0/1)	: BREATH CONTROLLER RANGE = (0 - 15), PITCH (ON), AMPLITUDE (OFF/ON) EG BIAS (OFF/ON)
AT = (0 - 15), P(0/15), A(0/1), E(0/1)	: AFTER TOUCH RANGE = (0 - 15), PITCH (OFF/ON), AMPLITUDE (OFF/ON) EG BIAS (OFF/ON)
SP L (0-2 - G8), H = (0-2 - G8)	: SPLIT Low = (0-2 - G8), High = (0-2 - G8)
SHIFT MODE	
MIDI VOICE INIT?	: VOICE INITIALIZE?
D. ENTRY RCV. (ON/OFF)	: DATA ENTRY RECEIVE (ON/OFF)
MIDI RCV. CH. (1 - 16)	: MIDI RECEIVE CHANNEL (1 - 16)
D. ENTRY VOL. (ON/OFF)	: DATA ENTRY VOLUME (ON/OFF)
CTL. CHNG RCV. (ON/OFF)	: CONTROL CHANGE RECEIVE (ON/OFF)

4. Program change mode

This is the mode to select voices. Use this mode when playing the TX7. This mode has the following two choices.

- Combined mode (when power is switched on, it will be in this mode.)
- Individual mode

Select voices using the [YES +1] [NO −1] switches.

1) Combined mode

Here is a diagram showing the data flow when a DX7 is connected to MIDI IN.OUT when the TX7 is in combined mode.

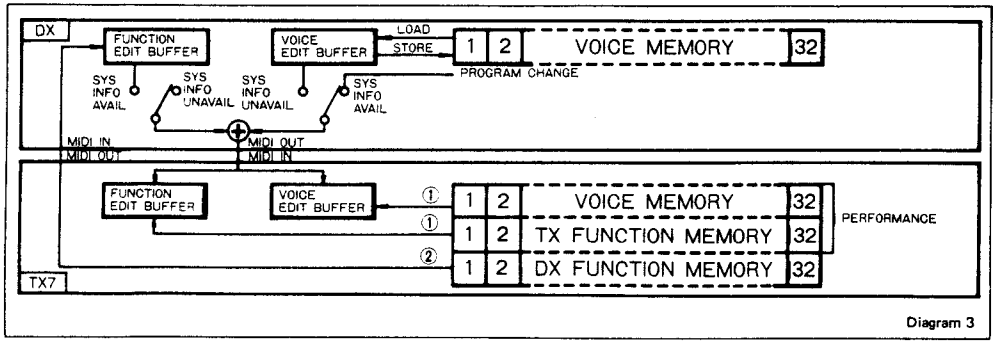

Diagram 3

- When you press a voice select switch on the DX7, program change data is sent from MIDI OUT. The TX7 will load voice and function data for the selected program number into its edit buffers . . . . . ①
  At the same time, the DX function data for that program number will be sent from the TX7 MIDI OUT as one performance bulk data . . . . . ②
- The same thing will happen if you select a program number using the TX7 switches.
  In this way, by using the program select switches of either the TX7 or the DX7, you can change both function memories simultaneously, simulating the operation of the DX1 performance memory.

2) Individual mode

- In the setup shown in diagram 3, when you press a DX7 voice select switch, program change data will be sent from MIDI OUT.
  The TX7 will send the DX function data for that program number out of its MIDI OUT as one performance bulk data . . . . . ②
  However, the TX7 voice and function will not change, ie. . . . . ① will not occur.
- In the setup shown in diagram 3, when you change the TX7 voice number, the TX7 will load the selected voice and function data into its buffers . . . . . ①
  However, DX function data will not be sent from MIDI OUT, ie. . . . . ② will not occur.

  In this way, you may select programs independently for the TX7 and DX7, and change voice and function memories as a pair, thus expanding the possibilities of combinations.

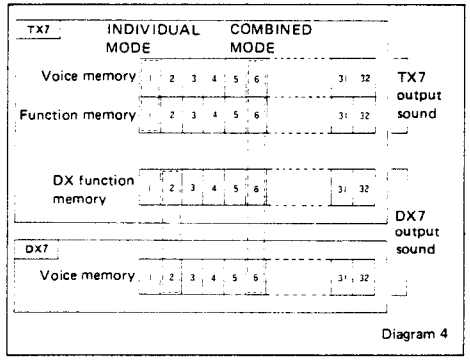

Diagram 4

3) Editing voices of the TX7

You may edit TX7 voices by sending the voice data from the TX7 to an editing device (such as the DX7), editing it, and sending the edited voice data back to the TX7.

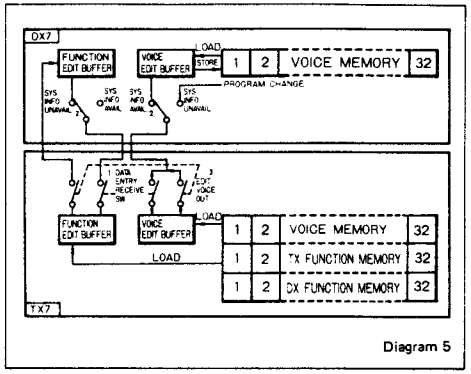

Diagram 5

① Turn the TX7 Data Entry Receive ON. (MIDI mode)

② Set the editing device to accept TX7 voice data. (For example, using the DX7, set the internal memory protect OFF, and set system information to AVAIL.)

③ When the TX7 display shows edit voice out, press [YES +1] to transmit the voice data in the edit buffer.

④ Put the editing device in edit mode, and edit the voice. This will change the data in the TX7 voice edit buffer (one parameter at a time). At present (January 1985), possible editing devices are DX7, DX9, DX1, YRM13.

*When in program change mode (combined mode, individual mode), if the DX7 system information is AVAIL and you press a voice select switch, 1 voice bulk data will be sent from MIDI OUT, and the data in the TX7 voice edit buffer will be replaced by the new data from the DX7.

5. Cassette mode

In this mode, you may store 32 voice and 32 TX function data, or 32 voice and 32 DX function data onto a cassette. Or, you may load this data from the cassette.

1) Save ··· Saving data onto a cassette. Press SAVE/VERIFY while in shift mode.

① To keep track of data stored on a cassette, assign an index number to the data. When loading, the TX7 will display this number.

SAVE NUMBER ____ .... Use the [+1] [−1] switches to select a number 0 ~ 127.
Save number

② Select the function data you want to save.

SAVE FUNC? ____ .... Select using [+1], [−1] switches.
INT or EXT

1	2	VOICE MEMORY	32	→ INT
1	2	TX FUNCTION MEMORY	32	→ INT
1	2	DX FUNCTION MEMORY	32	→ EXT

"INT" Save 32 voice data and 32 TX function data.
*This is automatically selected when power is turned ON.
"EXT" Save 32 voice data and 32 DX function data.

③ Execute save

SAVE TAPE? TX = ____ .... To save, press [+1].
↓ Save number
NOW WORKING!! .... This will take about 45 seconds. If you want to abort, press [−1].
↓
FINISHED!!! .... Save completed.

*Attenuation function data will not be saved on tape.

- Saving the DX7 data together with the TX7 data as a performance.
  1. Set [SAVE FUNC] to INT and save. (Save the TX7 data as in steps ① ~ ③. [TAPE 1].)
  2. Turn the TX7 memory protect OFF.
  3. Send 32 DX7 voice data to the TX7. (MIDI TRANSMIT)
     The 32 TX7 voice memories now hold the DX7 voices.
  4. The TX7 will display "MIDI RECEIVED".
  5. Change to [SAVE NUMBER] to distinguish between DX7 and TX7 data.
  6. Set [SAVE FUNC] to EXT and save. (Save the DX7 data as in steps ① ~ ③. [TAPE 2])

TAPE 1

TX−x
32 VOICE DATA
32 TX FUNCTION DATA

TAPE 2

TX-y
32 (DX7) VOICE DATA
32 DX FUNCTION DATA

2) Verify ···Checking to see if data has been correctly saved. Press SAVE/VERIFY after saving data.

VERIFY CASSETTE? .... Press [+1].
↓
NOW WORKING!! .... Play the tape. If you want to quit, press [−1].
↓
FOUND TX = ____
↓ Save number
FINISHED!!! .... Tape data is OK. If there is a problem [TAPE ERROR] will be displayed.

3) Protect ···Protect memory. Press LOAD/PROTECT.

① Turn off memory protect. When loading from a cassette, receiving 32 voice and 64 performance data via MIDI, or storing to memory, protect must be turned OFF. When the power is turned ON, memory protect will be ON.

MEM PROTECT ON .... To turn memory protect OFF, press [−1].
↓
OFF

4) Load ··· Load data from tape. Press LOAD/PROTECT.

① Select the function data you want to load.

LOAD FUNC? ____ .... Select using [+1] [−1] switches
INT or EXT

1	2	VOICE MEMORY	32	→ INT
1	2	TX FUNCTION	32	→ INT
1	2	DX FUNCTION	32	→ EXT

Load 32 TX7 voice data and 32 TX7 function data.
Load 32 TX7 voice data and 32 DX7 function data.

② Execute load.

LOAD CASSETTE? .... To begin load, press [+1].
↓
NOW WORKING!! .... If you want to abort, press [−1].
↓
FOUND TX = ____ .... Data has been found.
↓ Save number
FINISHED!!! .... Finished loading.
↓
LOAD CASSETTE?

*If you attempt to laod while memory protect is ON, [MEMORY PROTECT] will be displayed, and you will not be able to load.

6. Store mode

In this mode you may store data from the edit buffers into memory.

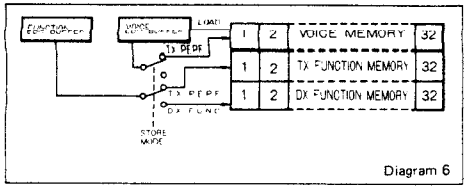

Diagram 6

1) Store TX performance – Store voice and TX function data in the buffers into the voice memory and TX function memory you select. Press TX PERF.

① Selecting the memory number to store into.

STR TX PERF? ____ .... Select the memory number using the [TX PERF] switch.
Memory number
*Set memory protect OFF.
To store, press [+1]
FINISHED!!! .... Voice and TX function data has been saved into the memory number you selected.

*The TX7 stores voice and function data as a pair. You cannot save only one or the other.

2) Store DX function ··· Store the function data in the edit buffer into the DX function memory you select. Press DX FUNC.

① Selecting the memory number to store into.

STR DX5 FUNC? ____ .... Select the memory number using the [DX FUNC] switch.
Memory number
*Set memory protect OFF.
To store, press [+1]
FINISHED!!! .... Function data has been saved into the DX function memory you selected.

7. MIDI mode

In this mode, you may set the conditions for MIDI data reception (MODE), and transmit or initialize voice data (DUMP/INIT).

1) Setting TX7 MIDI reception condition – Press (MODE).

① Control change reception

CTL. CHNG. REC ____ .... Select using [+1] [−1].
ON or OFF

"ON" ··· The following control signals will be received.
- Modulation wheel
- Breath controller
- Foot controller
- Portamento time
- Volume (Not the same as volume control via the data entry slider.)
- Sustain switch
- Portamento switch

"OFF"··· The above control signals will not be received.

*Control change reception is memorized.

② Data entry reception

D. ENTRY RCV. ____ .... Select using [+1], [−1].
ON or OFF

"ON" ··· The following MIDI signals will be received. (when editing TX7 voice or function data)
- Data entry
- Increment
- Decrement

"OFF"··· The above signals will not be received.

*Data entry reception ON/OFF is memorized.
*This switch and the data entry volume switch cannot both be ON at the same time. When you set the data entry volume switch ON, this switch will automatically go OFF.

③ MIDI receive channel.

MIDI RCV. CH ____ .... Select using [+1], [−1].
MIDI channel 1 ~ 16

*The TX7 MIDI output channel is automatically channel 1.
*The selected receive channel number is memorized.

④ Omni mode

OMNI MODE ____ .... Select using [+1] [−1]
ON or OFF

"ON" ··· The MIDI receive channel setting will have no effect, and MIDI signals on all channels will be received.
"OFF"··· Only MIDI signals with the same channel number as the receive channel setting will be received.

*Omni mode ON/OFF is memorized.

⑤ Data entry volume

D. ENTRY VOL ____ .... Select using [+1] [−1]
ON or OFF

"ON" ··· You may control the TX7's volume using the data entry slider on the DX7, DX9 or DX1.
"OFF"··· The data entry slider will not affect the TX7's volume.

*Data entry volume ON/OFF is memorized.
*This switch and the data entry receive switch cannot both be ON at the same time. When you set the data entry receive switch ON, this switch will automatically go OFF.

2) Transmitting and initializing voice data – Press (DUMP/INIT)

① MIDI transmit ... 32 voice and 64 performance data will be sent from the TX7 MIDI OUT.

MIDI TRANSMIT?	.... Press [+1] to transmit.
↓	
NOW WORKING!!	.... Transmitting data.
↓	
FINISHED!!!	.... Transmission completed.

*When transmitting to the DX7, set the DX7 memory protect OFF and set system information AVAIL.
*For the data format, see MIDI Data Format 4-8 (32 voice) and 4-7 (64 performance).

② Voice initialize ··· This will set all data in the TX7 voice and function edit buffers, 32 voice, 32 TX function, and 32 DX function memories to the initial valves shown in table 1.

VOICE INIT?	... Press [+1] to initialize.
↓	
NOW WORKING!!	.... Initialization in progress.
↓	
FINISHED!!!	.... Initialization completed.

*If you want to initialize all memory to the valves in table 1, set memory protect OFF.
*If memory protect is ON when you initialize, MEM. PROTECTED will be displayed, and only the voice and function buffers will be initialized.

Data that will be initialized

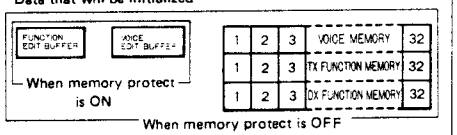

Diagram 7

Table 1
<Initialize data>

VOICE		
Algorithm		1
Feedback		0
Pitch		8 feet
EG		
EG scaling		None
Output level		OP1 99 OP2 ~ 6 0
Modulation		0
Oscillator key sync		ON
Transpose		C3
LFO	Valve	Triangle
	Speed	35
	Delay	0
	Pitch modulation sensitivity	3
	Pitch modulation depth	0

FUNCTION

Master tune		440Hz
Play mode		POLY
Pitch bend	Range	7
	Step	0
Portamento	Mode	RETAIN
	Glissando switch	PORTAMENTO
	Time	0
Modulation wheel	Range	8
	Pitch	1
	Amplitude	0
	EG bias	0
Foot controller	Range	8
	Pitch	0
	Amplitude	0
	EG bias	0
Breath controller	Range	15
	Pitch	0
	Amplitude	0
	EG bias	0
After touch	Range	8
	Pitch	0
	Amplitude	0
	EG bias	0
Key limit	Lowest	C-2
	Highest	G8
Attenuation		7

③ Function copy ··· Copy the data in the function edit buffer to all 32 TX function memories or to all 32 DX function memories.

FUNCTION COPY?	.... Press [+1] to copy.
↓	
FINISHED!!!	.... Finished copying.

*The copying destination is determined by the cassette mode save function.
"INT" ··· Copy function edit buffer to all 32 TX function memories.
"EXT" ··· Copy function edit buffer to all 32 DX function memories.
*Before you copy, set memory protect OFF.

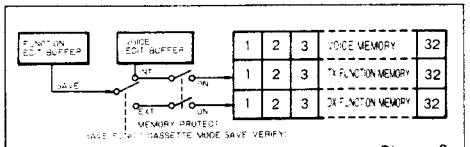

Diagram 8

④ Edit voice out ···Send the voice and function data in the edit buffers from MIDI OUT.

EDIT VOICE OUT?	.... Press [+1] to transmit.
↓	
FINISHED!!!	.... Data transmitted.

*Data is sent in the following order.
1. Function (1 performance bulk).
2. Voice (1 voice bulk).
*When transmitting to the DX7, set the DX7 memory protect OFF and set system information AVAIL.

8. Function mode

In this mode you may edit the data in the function edit buffer. Choose the parameter using the [FUNCTION] switch, and set the valve using the [+1] [–1] switches. The [FUNCTION] switch will step through the functions in the order shown in table 2, and in shift mode, will step in the reverse order. Except for MASTER TUNE, all parameters may be set independently for each of the 32 function memories.

Table 2

[PARAMETER]

	MASTER TUNE			MASTER TUNE
	PLAY MODE			PLAY MODE
	PITCH WHEEL RANGE			PW RNG = STP =
	PITCH WHEEL STEP			PW RNG = STP =
	PORTAMENTO MODE	(RTN, FLW, FGD, FUL)	*1	PORTA
	GLISSANDO SWITCH	(GLS, PRT)	*2	PORTA
	PORTAMENTO TIME			PORTA
NORMAL	MODULATION WHEEL	RANGE	*3	MW = P A E
		PITCH SW	*4	MW = P A E
		AMP SW		MW = P A E
		EG BIAS SW		MW = P A E
	FOOT CONTROL	RANGE		FC = P A E
		PITCH SW		FC = P A E
		AMP SW		FC = P A E
		EG BIAS SW		FC = P A E
	BREATH CONTROL	RANGE		BC = P A E
		PITCH SW		BC = P A E
		AMP SW		BC = P A E
		EG BIAS SW		BC = P A E
	AFTER TOUCH	RANGE		AT = P A E
		PITCH SW		AT = P A E
		AMP SW		AT = P A E
		EG BIAS SW		AT = P A E
	LIMIT LOWEST	KEY	*5	SP = H =
	LIMIT HIGHEST	KEY		SP L = =
	ATTENUATION		*6	ATTENUATION

*1 When POLY, RETAIN (RTN) sus key
FOLLOW (FLW) sus key
When MONO, FINGERED (FGD)
FULLTIME (FUL)

*2 GLISSANDO (GLS) or PORTAMENTO (PRT)

*3 The RANGE for MODULATION, FOOT, BREATH, and AFTERTOUCH will be displayed on a scale of 0 ~ 15. (The same as the DX1.)
The relation to the DX7 range is shown below.

TX7	0	1	2	3	4	5	6	7	8	9	10	11	12	13	14	15
DX7	0	6	13	19	26	33	39	46	53	59	66	72	79	86	92	99

*4 SW. will be displayed as ON = 1, OFF = 0.

*5 LIMIT KEY will be displayed as note name C-2 ~ G8. Key limit settings and note production range for the TX7 is shown below.

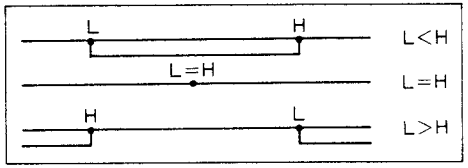

*6 ATTENUATION is on a scale of 0 ~ 7.
The volume may be changed in 8 steps, with 7 as maximum and 0 as minimum. Settings of the preset volume switch or MIDI volume data will be adjusted on this scale.

9. Preset volume

You may raise or lower the volume of the TX7, and establish 2 preset volume levels.

① **Raise volume** ···Press the [>] switch. (press and hold)
*The volume will increase on a scale of 0 ~ 80 (81 levels), and the dark section of the LCD will increase or decrease with the volume. When you release the switch, the volume will stay at that level. The [<] switch has the same operation.

② **Lower volume** ···Press the [<] switch. (press and hold)

③ **Store volume (LOW)** ··· While pressing the [LOW] switch, set the volume using the [>] [<] switches. Then release the [LOW] switch.

④ **Store volume (HIGH)** ··· While pressing the [HIGH] switch, set the volume using the [>] [<] switches. Then release the [HIGH] switch.

⑤ **Recall volume** ··· Press and release the [LOW] or [HIGH] switch. The volume you preset will be recalled.

MIDI DATA FORMAT

1. Reception conditions

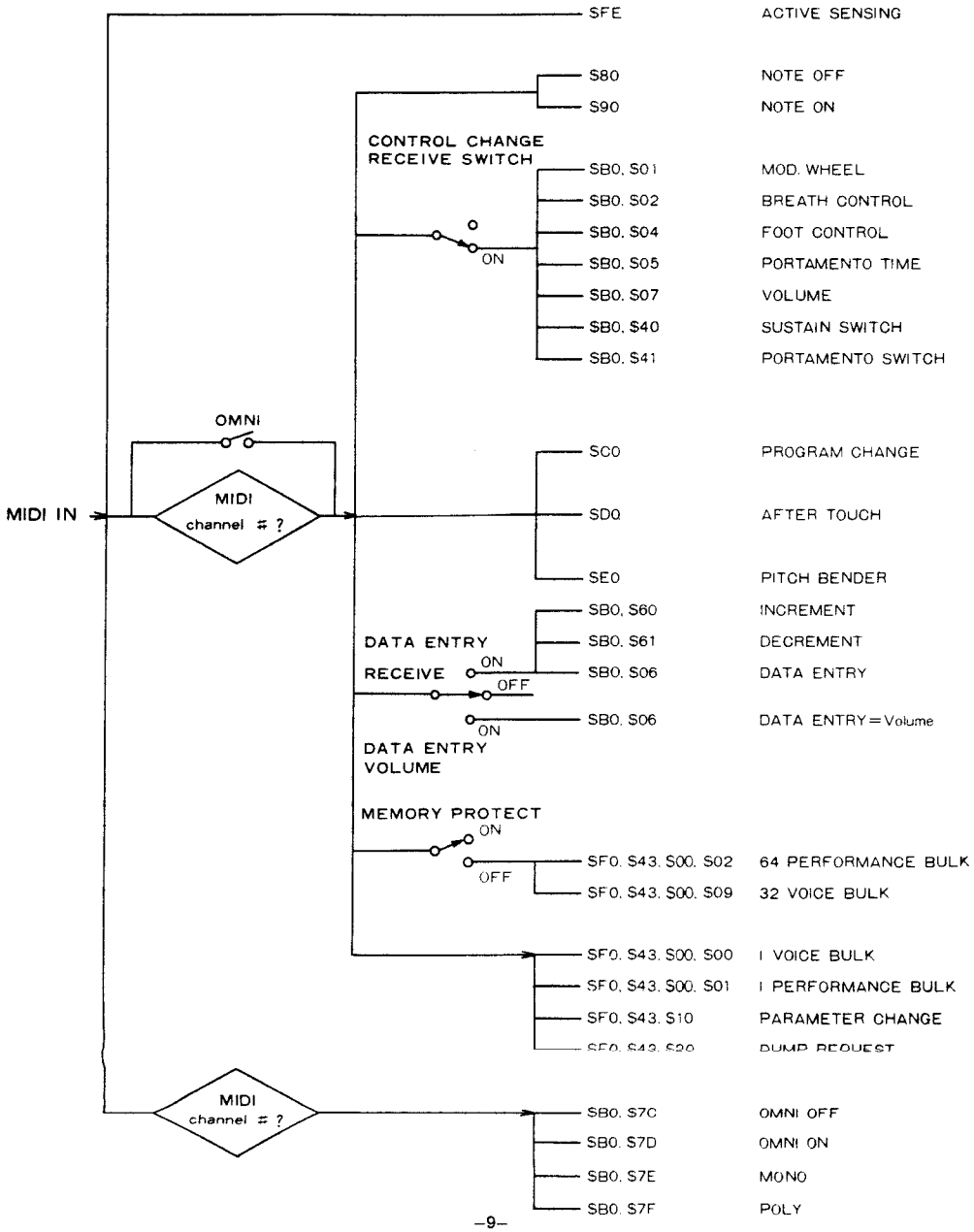

2. Reception data

2-1 Reception Channel, Omni

Using the panel switches, you may select the TX7 MIDI reception basic channel 1-16 and OMNI ON/OFF, and store this in memory. When OMNI OFF, only data with a channel number corresponding to the basic reception channel will be received, but when OMNI ON, data for, all channels will be received.

2-2 Channel Voice Messages

2-2-1 Key OFF

Status	1	0	0	0	n	n	n	n	n = channel number.
Note no.	0	k	k	k	k	k	k	k	k = 0 (C-2) ~ 127 (G8)
Velocity	0	v	v	v	v	v	v	v	v : ignored

2-2-2 Key ON/OFF

Status	1	0	0	1	n	n	n	n	n = channel number
Note no.	0	k	k	k	k	k	k	k	k = 0 (C-2) ~ 127 (G8)
Velocity	0	v	v	v	v	v	v	v	v = 0 Key OFF v = 1 ~ 127 Key ON

2-2-3 Control change

Status	1	0	1	1	n	n	n	n
Control No.	0	c	c	c	c	c	c	c
Control value	0	v	v	v	v	v	v	v

(a) Data received when CONTROL CHANGE RECEIVE SWITCH ON

C = 1	Modulation
C = 2	Breath controller
C = 4	Foot controller
C = 5	Portamento time
C = 7	Volume
C = 64	Sustain SW.
C = 64	Portamento SW.

(b) Data received when DATA ENTRY RECEIVE SWITCH ON

C = 6	Data entry
C = 96	Increment
C = 97	Decrement

This data will change the voice or function parameter which has been selected by a system exclusive message.

(c) Data received when DATA ENTRY VOLUME ON

C = 6	Data entry

The data entry data will be received as volume data.

2-2-4 Program change

Status	1	1	0	0	n	n	n	n	
Program no.	0	p	p	p	p	p	p	p	

It will disregard the 2 most significant bits of program no. and select programs 1-32.
This will be received only when the TX7 is in program change mode (COMBINED or INDIVIDUAL).

2-2-5 After touch

Status	1	1	0	1	n	n	n	n	
Pressure	0	v	v	v	v	v	v	v	

2-2-6 Pitch bend

Status	1	1	1	0	n	n	n	n	
Value (LSB)	0	u	u	u	u	u	u	u	
Value (MSB)	0	v	v	v	v	v	v	v	

8 bit resolution

2-3 Channel Mode Messages

Status	1	0	1	1	n	n	n	n	
	0	c	c	c	c	c	c	c	
	0	v	v	v	v	v	v	v	

C = 124	V = 0	OMNI MODE OFF
C = 125	V = 0	OMNI MODE ON
C = 126	V = 1	MONO MODE ON
C = 127	V = 0	POLY MODE ON

OMNI ON/OFF may also be selected using panel switches. Whichever signal arrives last has priority.
When the mode is changed, the voice will be dumped and key assign will be cleared.

2-4 System Realtime Messages

Status 1 1 1 1 1 1 1 0 active sensing

Once this code has been received, sensing will begin. If it does not receive any data or status for longer than 300 ms, it will dump voice, clear key assign, set sustain pedal off, set portamento switch on, and stop sensing.

2-5 System Exclusive Messages

2-5-1 1 voice bulk data

Status	1	1	1	1	0	0	0	0	
ID	0	1	0	0	0	0	1	1	
Substatus/ch	0	0	0	0	n	n	n	n	n = channel number
Byte count	0	0	0	0	0	0	0	1	
Byte count	0	0	0	1	1	0	1	1	
Data	0	d	d	d	d	d	d	d	
				⋮					155 bytes
	0	d	d	d	d	d	d	d	
Check sum	0	e	e	e	e	e	e	e	

The 155 bytes of voice data will enter the edit buffer and the voice of the currently sounding note will change. Check sum is the lowest 7 bits of the sum of all the data bytes.

2-5-2 1 performance bulk data

Status	1 1 1 1 0 0 0 0	
ID	0 1 0 0 0 0 1 1	
Substatus/ch	0 0 0 0 n n n n	
Format no.	0 0 0 0 0 0 0 1	
Byte count	0 0 0 0 0 0 0 0	
Byte count	0 1 0 1 1 1 1 0	
Data	0 d d d d d d d	94 bytes
	0 d d d d d d d	
Check sum	0 e e e e e e e	

Out of the 94 bytes, only the data applying to the TX7 will enter the edit buffer. The function parameters of currently sounding notes will change.
Ch A or B will receive the data according to the voice memory select flag in the data bytes.

2-5-3 64 performance bulk data

Status	1 1 1 1 0 0 0 0	
ID	0 1 0 0 0 0 1 1	
Substatus/ch	0 0 0 0 n n n n	
Format no.	0 0 0 0 0 0 1 0	
Byte count	0 0 1 0 0 0 0 0	
Byte count	0 0 0 0 0 0 0 0	
Data	0 d d d d d d d	4096 byte
	0 d d d d d d d	
Check sum	0 e e e e e e e	

The above data can be received only when memory protect is OFF. When it has been received, the LCD will show [MIDI RECEIVED !f] . Of the 64 performances, side A of the first 32 performances will be loaded into the function memories of programs 1-32. Whether the function memories are for the DX or TX will depend on the LOAD FUNCTION when you load the data from cassette. (When the power is turned on, it is be set to TX functions.)

2-5-4 32 voice bulk data

Status	1 1 1 1 0 0 0 0	
ID	0 1 0 0 0 0 1 1	
Substatus/ch	0 0 0 0 n n n n	
Format no.	0 0 0 0 1 0 0 1	
Byte count	0 0 1 0 0 0 0 0	
Byte count	0 0 0 0 0 0 0 0	
Data	0 d d d d d d d	4096 bytes
	0 d d d d d d d	
Check sum	0 e e e e e e e	

The above data can be received only when memory protect is OFF. When it has been received, the LCD will show [MIDI RECEIVED!v] . Voice data of programs 1-32 will change.

2-5-5 Parameter change

Status	1 1 1 1 0 0 0 0	
ID	0 1 0 0 0 0 1 1	
Substatus/ch	0 0 0 1 n n n n	
Parameter group no.	0 g g g g g h h	(g = 0, 1, 2, 4) (h = 0, 1)
Parameter no.	0 p p p p p p p	
Data	0 d d d d d d d	

Voice and function data in the edit buffer will change.

2-5-6 Dump request

Status	1 1 1 1 0 0 0 0
ID	0 1 0 0 0 0 1 1
Substatus/ch	0 0 1 0 n n n n
Format no.	0 f f f f f f f (f = 0, 1, 2, 9, 125)

When this has been received, the appropriate bulk data will be dumped from MIDI OUT.

3. Transmission data

Normally, there will be no data transmission. Data will be transmitted when there is a dump request signal from outside, or through operation of the panel switches. The transmitted data is voice and function system exclusive data. Data will always be sent on channel 1.

3-1 Transmission Conditions

(a) Transmission on dump request

The following 5 types of data will be transmitted according to format No. (f).

f = 0 — 1 voice bulk data
The contents of the voice edit buffer will be sent.

f = 1 — 1 performance bulk data
The contents of the function edit buffer will be sent, and bank A and B will have identical data.

f = 2 — 64 performance bulk data
The contents of the TX function memories 1-32 will be sent.

f = 9 — 32 voice bulk data
Voice data of programs 1-32 will be sent.

The above formats are the same for data reception, but an EOX ($F7) is added at the end.

f = 125	Conditions acknowledge
Status	1 1 1 1 0 0 0 0
ID	0 1 0 0 0 0 1 1
Substatus/ch	0 0 0 0 0 0 0 0
Format no.	0 1 1 1 1 1 0 1
Byte count	0 0 0 0 0 0 0 0
Byte count	0 0 0 1 0 0 0 0
Data	0 d d d d d d d
	0 d d d d d d d
Check sum	0 e e e e e e e
EOX	1 1 1 1 0 1 1 1

(b) Transmission by panel switch in [MIDI TRANSMIT] mode

When the display shows [MIDI TRANSMIT?] and you press the YES/+1 switch, the following data will be sent.
- 32 voice bulk data
- 64 performance bulk data

(c) Transmission by panel switch in [COMBINED] mode

When in combined mode, if ever you select a voice or it receives a program change signal, the following data will be sent.
- 1 performance data

(d) Transmission by panel switch in [INDIVIDUAL] mode

When in individual mode, if it receives a program change signal, the following data will be sent.
- 1 performance data

(e) Transmission by panel switch in [EDIT VOICE OUT] mode

When the display shows [EDIT VOICE OUT] and you press the YES/+1 switch, data will be sent in the following order.
1) 1 performance data
2) 1 voice data

4. System exclusive data format

4-1 DX7 VOICE PARAMETER CHANGE (g = 0)

Sub-group Number h	Parameter Number P	Parameter	Data	Notes
0	0	OP6 EG RATE 1	0～99	
	1	OP6 EG RATE 2	0～99	
	2	OP6 EG RATE 3	0～99	
	3	OP6 EG RATE 4	0～99	
	4	OP6 EG LEVEL 1	0～99	
	5	OP6 EG LEVEL 2	0～99	
	6	OP6 EG LEVEL 3	0～99	
	7	OP6 EG LEVEL 4	0～99	
	8	OP6 KEYBOARD LEVEL SCALING BREAK POINT	0～99	*1
	9	OP6 KEYBOARD LEVEL SCALING LEFT DEPTH	0～99	
	10	OP6 KEYBOARD LEVEL SCALING RIGHT DEPTH	0～99	
	11	OP6 KEYBOARD LEVEL SCALING LEFT CURVE	0～3	*2
	12	OP6 KEYBOARD LEVEL SCALING RIGHT CURVE	0～3	*2
	13	OP6 KEYBOARD RATE SCALING	0～7	
	14	OP6 AMPLITUDE MODULATION SENSITIVITY	0～3	
	15	OP6 KEY VELOCITY SENSITIVITY	0～7	
	16	OP6 OPERATOR OUTPUT LEVEL	0～99	
	17	OP6 OSCILLATOR MODE	0～1	*3
	18	OP6 OSCILLATOR FREQUENCY COARSE	0～31	*4
	19	OP6 OSCILLATOR FREQUENCY FINE	0～99	*4
	20	OP6 OSCILLATOR DETUNE	0～14	*5
	21～41	OP5		
	42～62	OP4		
	63～83	OP3		
	84～104	OP2		
	105～125	OP1		
	126	PITCH EG RATE 1	0～99	
	127	PITCH EG RATE 2	0～99	
1	0 (128)	PITCH EG RATE 3	0～99	
	1 (129)	PITCH EG RATE 4	0～99	
	2 (130)	PITCH EG LEVEL 1	0～99	
	3 (131)	PITCH EG LEVEL 2	0～99	
	4 (132)	PITCH EG LEVEL 3	0～99	
	5 (133)	PITCH EG LEVEL 4	0～99	
	6 (134)	ALGORITHM SELECT	0～31	
	7 (135)	FEEDBACK	0～7	
	8 (136)	OSCILLATOR KEY SYNC	0～1	
	9 (137)	LFO SPEED	0～99	
	10 (138)	LFO DELAY	0～99	
	11 (139)	LFO PITCH MODULATION DEPTH	0～99	
	12 (140)	LFO AMPLITUDE MODULATION DEPTH	0～99	
	13 (141)	LFO KEY SYNC	0～1	
	14 (142)	LFO WAVE	0～5	*6
	15 (143)	LFO PITCH MODULATION SENSITIVITY	0～7	
	16 (144)	TRANSPOSE	0～48	Concert pitch at 24
	17 (145)	VOICE NAME 1	ASCII	
	‹ ‹	‹		
	26 (154)	VOICE NAME 10	ASCII	

1	*27 (155)*	*OPERATOR ON/OFF*	xeeeeee	*7
	28 (156)	OPERATOR SELECT	0～5	*8

*1 BREAK POINT

BREAK POINT	0	1	2	3	4	5	15	27	39	51	63	75	87	99
MIDI NOTE #	21	22	23	24	25	26	36	48	60	72	84	96	108	120
NOTE	A_1	A_1#	B_1	C_0	C_0#	D_0	C_1	C_2	C_3	C_4	C_5	C_6	C_7	C_8

*2 KEYBOARD LEVEL SCALING CURVE

	0	1	2	3
CURVE	–LIN	–EXP	+EXP	+LIN

*3 OSCILLATOR MODE

"0" . . . . . frequency ratio
"1" . . . . . fixed frequency

*4 FREQUENCY COARSE FINE

i) For Frequency Ratio
When FINE = 0

COARSE	0	1	2	3	10	30	31
FREQUENCY RATIO	0.5	1	2	3	10	30	31

When COARSE = 1

FINE	0	1	2	3	10	50	99
FREQUENCY RATIO	1.00	1.01	1.02	1.03	1.10	1.50	1.99

ii) For Fixed Frequency
When FINE = 0

COARSE	0	1	2	3	4	5	6	7		31
FREQUENCY (Hz)	1	10	100	1000	1	10	100	1000		1000

When COARSE = 0

FINE	0	1	2	3	4	5	10	20	50	99
FREQUENCY (Hz)	1.000	1.023	1.047	1.072	1.096	1.122	1.259	1.585	3.162	9.772

*5 DETUNE

	0	1	2	3	4	5	6	7	8	9	10	11	12	13	14
DETUNE	–7	–6	–5	–4	–3	–2	–1	0	1	2	3	4	5	6	7

*6 LFO WAVE

	0	1	2	3	4	5
WAVE	TRIANGLE	SAW DOWN	SAW UP	SQUARE	SINE	SAMPLE/HOLD

*7 OPERATOR ON OFF

Bit	b_5	b_4	b_3	b_2	b_1	b_0
OP	OP1	OP2	OP3	OP4	OP5	OP6

Bit Map
"0" . . . OFF "1" . . . ON

*8 OPERATOR SELECT

	0	1	2	3	4	5
OPERATOR	OP6	OP5	OP4	OP3	OP2	OP1

4-2 DX PERFORMANCE PARAMETER CHANGE (g = 1) (h = 0)

Parameter Number P	Parameter	Data	Notes
0			
1	SOURCE SELECT	1 ~ 16	* 3
2	POLY/MONO	0 ~ 1	
3	PITCH BEND RANGE	0 ~ 12	
4	PITCH BEND STEP	0 ~ 12	
5	PORTAMENTO TIME	0 ~ 99	
6	PORTAMENTO/GLISSANDO	0 ~ 1	
7	PORTAMENTO MODE	0 ~ 1	* 1
8			
9	MODULATION WHEEL SENSITIVITY	0 ~ 15	
10	MODULATION WHEEL ASSIGN	0 ~ 7	* 2
11	FOOT CONTROLLER SENSITIVITY	0 ~ 15	
12	FOOT CONTROLLER ASSIGN	0 ~ 7	* 2
13	AFTER TOUCH SENSITIVITY	0 ~ 15	
14	AFTER TOUCH ASSIGN	0 ~ 7	* 2
15	BREATH CONTROLLER SENSITIVITY	0 ~ 15	
16	BREATH CONTROLLER ASSIGN	0 ~ 7	* 2
17			
18			
19			
20			
21			
22			
23			
24			
25			
26	AUDIO OUTPUT LEVEL ATTENUATOR	0 ~ 7	
27			
28			
29			
30			
31			
32			
33			
34			
⋮			
63			Concert
64	MASTER TUNING	0 ~ 127	pitch at 64

***1 PORTAMENTO MODE**

"0" . . . sustain-key pitch retain
"1" . . . sustain-key pitch follow

***2 EFFECT ASSIGN**

Bit	b_2	b_1	b_0
ASSIGN	EG BIAS	AMPLITUDE	PITCH

***3 SOURCE SELECT**

Corresponds to RECEIVE BASIC CHANNEL 1 ~ 16.

4-3 DX7 FUNCTION PARAMETER CHANGE (g = 2) (h = 0)

Parameter Number P	Parameter	Data	Notes
64	POLY/MONO	0 ~ 1	
65	PITCH BEND RANGE	0 ~ 12	
66	PITCH BEND STEP	0 ~ 12	
67	PORTAMENTO MODE	0 ~ 1	
68	PORTAMENTO/GLISSANDO	0 ~ 1	
69	PORTAMENTO TIME	0 ~ 99	
70	MODULATION WHEEL SENSITIVITY	0 ~ 99	* 1
71	MODULATON WHEEL ASSIGN	0 ~ 7	
72	FOOT CONTROLLER SENSITIVITY	0 ~ 99	* 1
73	FOOT CONTROLLER ASSIGN	0 ~ 7	
74	BREATH CONTROLLER SENSITIVITY	0 ~ 99	* 1
75	BREATH CONTROLLER ASSIGN	0 ~ 7	
76	AFTER TOUCH SENSITIVITY	0 ~ 99	* 1
77	AFTER TOUCH ASSIGN	0 ~ 7	

*1 EFFECT SENSITIVITY
Data is received on a range of 0 ~ 99 and stored on a range of 0 ~ 15.

4-4 TX FUNCTION PARAMETER CHANGE (g = 4) (h = 1)

Parameter Number P	Parameter	Data	Notes
0	DATA ENTRY RECEIVE SWITCH	0, 1	
1	CONTROL CHANGE RECEIVE SWITCH	0, 1	
2	DATA ENTRY VOLUME SWITCH	0, 1	
3	COMPUTE COMMUNICATION SWITCH	0, 1	
4	COMBINED (0) OR INDIVIDUAL (1)	0, 1	
5	NOTE LIMIT LOW	0 ~ 127	
6	NOTE LIMIT HIGH	0 ~ 127	
7	MEMORY PROTECT OFF/ON	0, 127	
11	LOAD FUNCTION SELECT INT/EXT	0, 127	

*1 When data 1 is received, COMBINED MODE, CONTROL CHANGE RECEIVE, DATA ENTRY RECEIVE will be set, and 1 performance data will not be sent.
When data 0 is received, COMBINED MODE, CONTROL CHANGE RECEIVE, DATA ENTRY OFF will be sent, and 1 performance data will be sent.

4-5 1 VOICE BULK DATA

155 bytes of data. For the data format, see 0 ~ 154 of 4-1.

4-6 1 PERFORMANCE BULK DATA (f = 1)

Parameter Number P	Parameter	Data	Notes
0			
1			
2	VOICE A POLY/MONO	0～1	
3	VOICE A PITCH BEND RANGE	0～12	
4	VOICE A PITCH BEND STEP	0～12	
5	VOICE A PORTAMENTO TIME	0～99	
6	VOICE A PORTAMENTO/GLISSANDO	0～1	
7	VOICE A PORTAMENTO MODE	0～1	
8			
9	VOICE A MODULATION WHEEL SENSITIVITY	0～15	
10	VOICE A MODULATION WHEEL ASSIGN	0～7	
11	VOICE A FOOT CONTROLLER SENSITIVITY	0～15	
12	VOICE A FOOT CONTROLLER ASSIGN	0～7	
13	VOICE A AFTER TOUCH SENSITIVITY	0～15	
14	VOICE A AFTER TOUCH ASSIGN	0～7	
15	VOICE A BREATH CONTROLLER SENSITIVITY	0～15	
16	VOICE A BREATH CONTROLLER ASSIGN	0～7	
17			
18			
19			
20			
21			
22			
23			
24			
25			
26	VOICE A AUDIO OUTPUT LEVEL ATTENUATOR	0～7	
27			
28			
29			
30 ～ 59	VOICE B		
60			
61	VOICE MEMORY SELECT FLAG	0～1	
62			
63			
64	PERFORMANCE NAME 1	ASCII	
65	PERFORMANCE NAME 2	ASCII	
～	～	ASCII	
92	PERFORMANCE NAME 29	ASCII	
93	PERFORMANCE NAME 30	ASCII	

4-7 64 PERFORMANCE BULK DATA (f = 2)

Data are listed in order for the 64 performances in units of 64 bytes (64 performance). The TX7 uses the first 32 performance groups.

Address	6 5 4 3 2 1 0	Parameter	Data	Parameter	Data
0	P/M	VOICE A POLY/MONO	0～1		
1	PBS(LO) PBR	VOICE A P. BEND STEP	0～12	PITCH BEND RANGE	0～12
2	PTIM	VOICE A PORTA. TIME	0～99		
3	M GL	VOICE A PORTA. MODE	0～1	PORTAMENTO/GLISSANDO	0～1
4	MWA MWS	VOICE A MOD. WHEEL ASN.	0～7	MOD. WHEEL SENS.	0～15
5	FCA FCS	VOICE A FOOT CONT. ASN.	0～7	FOOT CONT. SENS.	0～15
6	ATA ATS	VOICE A AFTER TOUCH ASN.	0～7	AFTER TOUCH SENS.	0～15
7	BCA BCS	VOICE A BREATH CON ASN.	0～7	BREATH CON. SENS.	0～15
8					
9					
10					
11					
12					
13					
14	ATN	VOICE A ATTENUATION	0～7		
15	PBS (HI)	VOICE A PITCH B. STEP	(MSB)		
16 ～ 31	VOICE B				
32	VMS KMOD	VOICE MEMORY SELECT	0～1	KEY ASSIGN MODE	0～2
33					
34	PNAM 1	PERFORMANCE NAME 1	ASCII		
～			ASCII		
63	PNAM 30	PERFORMANCE NAME 30	ASCII		
	6 5 4 3 2 1 0				

With the Key Assign in Single mode (KMOD = 0) VOICE A or B are loaded with VMS.
With Key Assign in DUAL, SPLIT (KMOD = 1, 2), VOICE A is always loaded.

4-8 32 VOICE BULK DATA (f=9)

128 bytes of data per voice, voices 1 ~ 32.

Address	6 5 4 3 2 1 0	Parameter	Data	Parameter	Data
0	R1	OP6 EG RATE 1	0 ~ 99		
1	R2	OP6 EG RATE 2	0 ~ 99		
2	R3	OP6 EG RATE 3	0 ~ 99		
3	R4	OP6 EG RATE 4	0 ~ 99		
4	L1	OP6 EG LEVEL 1	0 ~ 99		
5	L2	OP6 EG LEVEL 2	0 ~ 99		
6	L3	OP6 EG LEVEL 3	0 ~ 99		
7	L4	OP6 EG LEVEL 4	0 ~ 99		
8	BP	SCALING BREAK P.	0 ~ 99		
9	LD	SCALING LEFT DEPTH	0 ~ 99		
10	RD	SCALING RIGHT DEPTH	0 ~ 99		
11	RC LC	SCALING RIGHT CURVE	0 ~ 3	LEFT CURVE	0 ~ 3
12	PD RS	OSCILLATOR DETUNE	0 ~ 14	RATE SCALING	0 ~ 7
13	KVS AMS	KEY VELOCITY SENS.	0 ~ 7	AMPLITUDE MOD. SENS.	0 ~ 3
14	OL	OUTPUT LEVEL	0 ~ 99		
15	FC M	FREQUENCY COARSE	0 ~ 31	OSCILLATOR MODE	0 ~ 1
16	FF	FREQUENCY FINE	0 ~ 99		
17 ~ 33	OP5				
34 ~ 50	OP4				
51 ~ 67	OP3				
68 ~ 84	OP2				
85 ~ 101	OP1				
102	PR1	PITCH EG RATE 1	0 ~ 99		
103	PR2	PITCH EG RATE 2	0 ~ 99		
104	PR3	PITCH EG RATE 3	0 ~ 99		
105	PR4	PITCH EG RATE 4	0 ~ 99		
106	PL1	PITCH EG LEVEL 1	0 ~ 99		
107	PL2	PITCH EG LEVEL 2	0 ~ 99		
108	PL3	PITCH EG LEVEL 3	0 ~ 99		
109	PL4	PITCH EG LEVEL 4	0 ~ 99		
110	ALS	ALGORITHM SELECT	0 ~ 31		
111	OKS FB	OSCILLATOR KEY SYNC	0 ~ 1	FEEDBACK	0 ~ 7
112	LFS	LFO SPEED	0 ~ 99		
113	LFD	LFO DELAY	0 ~ 99		
114	LPMD	LFO PITCH MOD DEPTH	0 ~ 99		
115	LAMD	LFO AMP MOD DEPTH	0 ~ 99		
116	LPMS LFW LFKS	LFO PITCH MOD SENS.	0 ~ 7	WAVE KEY SYNC	0 ~ 5 0 ~ 1
117	TRNP	TRANSPOSE	0 ~ 48		
118	VNAM1	VOICE NAME 1	ASCII		
119	VNAM2	VOICE NAME 2	ASCII		
120	VNAM3	VOICE NAME 3	ASCII		
121	VNAM4	VOICE NAME 4	ASCII		
122	VNAM5	VOICE NAME 5	ASCII		
123	VNAM6	VOICE NAME 6	ASCII		
124	VNAM7	VOICE NAME 7	ASCII		
125	VNAM8	VOICE NAME 8	ASCII		
126	VNAM9	VOICE NAME 9	ASCII		
127	VNAM10	VOICE NAME 10	ASCII		
	6 5 4 3 2 1 0				

4-9 CONDITION ACKNOWLEDGE (f = 125)

Address	Parameter	Data	Notes
0	CLASSIFICATION ASCII 'L'	$4C	
1	CLASSIFICATION ASCII 'M'	$4D	
2	CLASSIFICATION ASCII ' ␣ '	$20	
3	CLASSIFICATION ASCII ' ␣ '	$20	
4	MODEL NAME ASCII '8'	$38	
5	MODEL NAME ASCII '9'	$39	
6	MODEL NAME ASCII '5'	$35	
7	MODEL NAME ASCII '0'	$30	
8	MODEL NAME ASCII ' ␣ '	$20	
9	MODEL NAME ASCII ' ␣ '	$20	
10	SOFTWARE VERSION #	V	
11	SOFTWARE REVISION #	R	
12	CONDITION DATA 1 *1		
13	CONDITION DATA 2 RECEIVE CH	0 ~ 15	
14	CONDITION DATA 3 BATTERY VOLT		1 unit =
15	CONDITION DATA 4	0	0.1 volts

*1 Bit format

bit	Parameter	Data	Notes
b0	PERFORMANCE ECHO BACK MODE	0	*2
b1	COMPUTER COMMUNICATION MODE	1	*3
b2	VOLUME CONTROL BY DATA ENTRY LEVER	0	*4
b3	CONTROL CHANGE RECEIVE	1	*5
b4	OMNI MODE	0/1	*6
b5	MEMORY PROTECT	0/1	*7
b6	DATA ENTRY RECEIVE	0/1	*8

*2 Data is 1 only when in COMBINED MODE and internal mode has been selected.
*3 Data is 1 only when in COMBINED MODE, CONTROL CHANGE RECEIVE, DATA ENTRY RECEIVE.
*4 Data is 1 only when DATA ENTRY VOLUME ON.
*5 Data is 1 only when CONTROL CHANGE RECEIVE SWITCH ON.
*6 Data is 1 only when OMNI MODE ON.
*7 Data is 1 only when MEMORY PROTECT SWITCH ON.
*8 Data is 1 only when DATA ENTRY SWITCH ON.

[FM expander] Date : 11/10, 1984

Model TX7 MIDI Implementation Chart Version : 1.0

Function ...	Transmitted	Recognized	Remarks
Basic Default	1	1 - 16 X	X memorized
Channel Changed	x	1 - 16 X	
Mode Default	3	1,2,3,4 X	
Mode Messages	x	POLY,MONO(M=1)	
		OMNIon,OMNIoff	not altered
Note Number : True voice	x XXXXXXXXXXXXXX	0 - 127 0 - 127	
Velocity Note ON	x	o	
Velocity Note OFF	x	x	
After Key's	x	x	
After Touch Ch's	x	o	
Pitch Bender	x	o	
Control Change 1	x	o	Modulation wheel
Control Change 2	x	o	Breath control
Control Change 4	x	o	Foot controller
Control Change 5	x	o	Portamento time
Control Change 6	x	o	Data entry knob
Control Change 7	x	o	Volume
Control Change 64	x	o	Sustain foot sw
Control Change 65	x	o	Portamento f sw
Control Change 96	x	o	Data entry +1
Control Change 97	x	o	Data entry -1
Prog Change : True #	x XXXXXXXXXXXXXX	o 0 - 127 0 - 31	
System Exclusive	o	o	Voice parameters
System : Song Pos	x	x	
: Song Sel	x	x	
Common : Tune	x	x	
System Real Time : Clock	x	x	
System Real Time : Commands	x	x	
Aux : Local ON/OFF	x	x	
Aux : All Notes OFF	x	x	
Mes- : Active Sense	x	o	
sages: Reset	x	x	
Notes			

Mode 1 : OMNI ON, POLY Mode 2 : OMNI ON, MONO o : Yes

Mode 3 : OMNI OFF, POLY Mode 4 : OMNI OFF, MONO x : No

CONSTRUCTION OF THE TX7

You may think of the TX7 as a DX7 without the sub CPU, that is to say, a DX7 without the keyboard section. The circuitry of the TX7 is on four boards; DM, AS, PN, and AD. The DM board contains the micro computer which controlls the FM tone generator, panel switches, MIDI and the LCD. The AS board contains the FM tone generator. Its EGS and OPS (the same ICs as the DX7) are controlled by the MPU. The PN board contains the panel switches. The MPU on the DM board is constantly checking to see if any of these switches are being pressed. The AD board contains the power supply. To make it light and compact, we have used a switching power supply of the RCC (Ringing Choke Converter) type.

1. Memory map

The memory map of the TX7 is shown below.

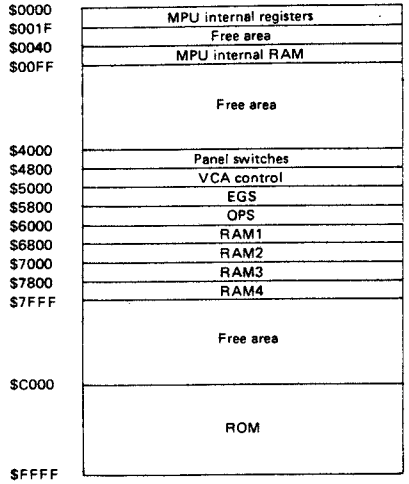

1) Voice and function memory, and edit buffers

The data in RAM1, 2, 3 is as follows.

$601E ~ $701D : 32 voice data
$701E ~ $70B8 : Voice edit buffer data
$70C9 ~ $72C8 : 32 TX function data
$72C9 ~ $74C8 : 32 DX function data
$74C9 ~ $74DA : Function edit buffer data

Here is a comparison of the data format with the illustration on page 1.

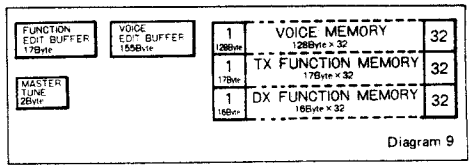

Diagram 9

Since the master tune data is common to all 32 voices, there are 2 additional bytes beside the 17 bytes in the function edit buffer. (When the DX performance parameter MASTER TUNE is sent via MIDI, it is only 1 byte. However, since the TX internal tuning data uses 14 bits, 2 bytes of memory space are needed.)

The format of each memory is as follows.

- Voice edit buffer data ···155 bytes
  Format is the same as DX voice parameter change perameter numbers 0 ~ 154. See MIDI data format 4-1.
- 32 voice data ···128 bytes x 32 = 4 K bytes
  Format for each voice is the same as the voice edit buffer, but 155 bytes of data is packed into 128 bytes of memory space. (Unused bits are moved over.)
- Function edit buffer data ···17 bytes
  Format is the same as MIDI data format 4-2 (DX performance parameter change) parameters 2 ~ 7, 9 ~ 16, 26. These 15 bytes plus the 2 bytes Key Limit Low and Key Limit High make up the total of 17 bytes.
- 32 TX function data ···17 bytes x 32 = 544 bytes
  Format for each function is the same as the function edit buffer. (When saving data to tape, attenuation data will not be saved.)
- 32 DX function data ···16 bytes x 32 = 512 bytes
  Format is the same as MIDI data format 4-2 (DX performance parameter chenge) parameters 2 ~ 7, 9 ~ 16. These 14 bytes plus the 2 bytes Key Limit Low and Key Limit High make up the total of 16 bytes.

2. Circuitry of the TX7

1) MPU (HD63A03X)

The TX7's MPU is the same as that of the TF1 (tone generation module for the TX816). The MPU contains an ACIA (Asyncronous communication unit), I/O ports s, and RAM. The ACIA transmits and receives MIDI messages, and the I/O ports check the condition of the switches and send information to the LCD.

- Vcc, Vss — Vcc is the SV power supply terminal, Vss is the ground terminal.
- EXTAL — This receives a 4.71 Mhz clock with a 50% duty cycle. (Since an external clock is used, the XTAL terminal is left open.)
- MP_0, MP_1 — This sets the operation mode of the MPU. MP_0 = "High", MP_1 = "Low".
- $\overline{RES}$ — This terminal resets the MPU.
- $\overline{STBY}$ — This terminal is for setting the MPU to stand-by mode, but since it is not used in this circuit, it has been fixed at "High".
- $\overline{NMI}$ — This terminal if for non-maskable interrupt, but since it is not used in this circuit, it has been fixed at "High".
- Port Z — In this circuit, P_{20} ~ P_{27} are used as follows.
  - P20 (out) — Transmission to cassette. Transmission speed: 1200 band (1200Hz – 1 cycle "0", 2400 Hz – 2 cycle "1"), modulation: FSK. Data is compatable with the CX5 (YRM-13). (However, the YRM-13 will not accept Key Limit or Attenuation data.)
  - P21 ( ) — Not used.

P22 (in) This is a 500 Khz clock input which determines the MIDI transmission speed. The clock is internally divided by 16. Therefore, MIDI transmission is 31.25 K baud.
P23 (in) Receives MIDI messages.
P24 (out) Sends MIDI messages.
P25 (out) This sends a signal to the RS terminal of the LCD. This signal tells the LCD whether the data from port 6 P60 ~ P67 is an instruction or data to be displayed. "High" means data to be displayed.
P26 (out) This determines input or output of LCD data. "High": read. "Low": write.
P27 (out) Finalize LCD data. Data finalized when down.

- Port 5
  P50 (in) Condition of "Low" switch
  P51 (in) Condition of "◀" switch
  P52 (in) Condition of "▶" switch
  P53 (in) Condition of "High" switch
  P54, 55 Not used
  P56 (in) Battery voltage condition
  P57 (in) Read data from cassette
- Port 6
  Port 6 $P_{60} \sim P_{67}$ transmit instructions and data to the LCD.
- Bus
  The address bus is $A_0 \sim A_{15}$. The data bus is $D_0 \sim D_7$.
- BA
  Bus available terminal. When the MPU has received a HALT and the bus is free, this terminal will be "High". Not used in this circuit.
- $\overline{LIR}$
  This indicates that the data bus is carrying the op code of an instruction.
- R/$\overline{W}$
  When the MPU is reading, this is "High". When writing, this is "Low".
- $\overline{WR}$
  When the MPU is writing, this is "Low".
- $\overline{RD}$
  When the MPU is reading, this is "High".
- E
  This enables a system clock to be sent.

2) Tone generator section

The tone generator section is the same as that of the DX7. The EGS and OPS use the same IC and function in the same way as the DX7. The EGS is master and the OPS is slave. All the OPS does is to perform FM calculations on the data sent to it from the EGS (FM calculation parameters $EC_1 \sim EC_{12}$, $F_1 \sim F_{14}$) according to the algorithm to which it is set.

- EGS
  This is an acronym for Envelope Generator of Synthesizer. This is the LSI that reads voice data (rate, level, key code etc) from the MPU into its internal registers and produces (digital) envelope shape information according to the key on/off signals it receives from the MPU. It also produces (digital) frequency data for the key which has been pressed.
  Along with the key on (KON) data, the volume envelope date $EC_1 \sim EC_{12}$ and frequency data $F_1 \sim F_{14}$ are sent to the OPS, in synchronization with the system sync signal SYNC (92Y96).

• Vdd, Vss	Vdd is +5V power supply, Vss is ground
• RES	This terminal resets the EGS.
• $\overline{SYNC}$	Input terminal for synchronizing the OPS. (92Y96)
• $\overline{CE}$	Pulse input terminal for enabling reception of data from the MPU.
• $\overline{WR}$	Pulse input terminal for writing data from the MPU into internal registers. In the TX7, this is connected to GND.
• $A_0 \sim A_7$	Address input terminal for specifying internal registers.
• $D_0 \sim D_7$	Data input terminals
• $F_1 \sim F_{14}$	Parallel output for frequency data of each channel
• $EC_1 \sim EC_{12}$	Parallel output for volume data of each channel
• OE	Data output control terminal, but in the TX7 is connected to GND.
• KON	Output terminal for key ON data of the specified channel
• ϕ_1, ϕ_2	System clock input terminals

- OPS
  This is an acronym for Operator of Synthesizer. By performing FM calculations on the volume envelope, frequency and KON data sent to it from the EGS and on the data already stored in the OPS registers (algorithm NO., feedback level), the OPS produces audio data (in 12 bit digital form).
  The data that the OPS receives directly from the MPU is 2 bytes as follows.
  Mode (operation mode of OPS) 1 byte
  Algorithm no. (upper 5 bits) / Feedback level (lower 3 bits) 1 byte
  The terminal WR writes to the OPS, and has been assigned to addresses 5800 (H) ~ 5801 (H). Since the address line A_0 is connected to the data set terminal DS of the OPS, the OPS mode selector is A_0 = "Low", ie. 5800 (H). When A_0 = "High", ie. 5801 (H) specifies data register (algorithm no., feedback level).
  The output data of the OPS is 12 bit. However, to make this the equivalent of 14 bit, the lower levels are expanded 2, 4, and 8 times respectively. To return this to the original valve, shift data ($SF_0 \sim SF_3$) is sent out.
  SF_0: 1 times, SF_1: 1/2 times, SF_2: 1/4 times, SF_3: 1/8 times.

Vdd, Vss	Vdd is +5V power supply, Vss is ground
• DS	This determines whether data input $D_0 \sim D_7$ is mode or algorithm no and feedback. Mode is "L".
• $\overline{WR}$	Input terminal indicates whether to write the data at $D_0 \sim D_7$ into an internal register.
• SH_1, SH_2	Sample and hold output terminal
• $\overline{SYNC}$	Output terminal for 92Y96 sync signal
• $F_1 \sim F_{14}$	Parallel inputs for frequency data from EGS
• $DA_1 \sim DA_{12}$	Digital audio parallel outputs
• $SF_0 \sim SF_3$	Shift data outputs (to restore expanded output data)
• $EC_1 \sim EC_{12}$	Parallel inputs for volume envelope data from the EGS
• KON	Key ON data input for the selected channel
• $D_0 \sim D_7$	Inputs for mode, algorithm number, and feedback level from the MPU
• ϕ_1, ϕ_2	System clock inputs

3) D/A converter section

The 12 bit digital data from the OPS is sent to the DAC IC24 and converted into an analog signal. This 12 bit digital data has been expanded inside the OPS, so the IC26 and the connected resistances will return it to the original level. This is controlled by the shift data sent from the OPS ($SF_0 \sim SF_3$), which is sent at the same time as the 12 bit digital data. The shift data is as follows.
When the data sent to the DAC has been shifted 1 time, SF_0 sends "High".
When the data sent to the DAC has been shifted 2 times, FS_1 sends "High".
When the data sent to the DAC has been shifted 4 times, SF_2 sends "High".
When the data sent to the DAC has been shifted 8 times, SF_3 Sends "High".
At this point, the level has been corrected, but it is still not a true analog waveform. Until the digital audio data comes into the sample and hold circuit, it is being outplut in steps (first note, second note, third note, . . .). Controlled by the sampling signals SH_1 and SH_2, the IC27 samples the digital audio signal. A 120 pf capacitor holds the level and converts it into an analog signal. (SH_1 samples the first through eighth notes, SH_2 samples the ninth through sixteenth notes.) This waveform still has a stair-step shape, so it is put through a low-pass filter to become a true analog waveform. This signals volume is controlled by the VCA, and it is sent out.

4) Volume control and battery voltage check circuitry

Volume is controlled by the VCA IC38. The volume is determined by the following information.

- ○ Panel switch preset volume . . . LOW ◀ ▶ HIGH
- ○ Attenuation (function mode). . .ATTENUATION 0 ~ 7
- ○ Data entry volume control
- ○ Control change. . . control number 7

These two are mutually exclusive; ie only one at a time.

When 4800 (H) comes up, IC28 (data latch) will latch the data on the data bus line. (At this time, it latches only the upper 6 bits of the data bus.)
This data that has been latched is sent out of the ○ terminal as "High" +5V, "Low" 0V, and is input to rader resistance RM_1. This voltage passes through IC35 (which makes up the low pass filter) and appears at pin 1 of IC35. It is divided by a 270Ω and a 22Ω resistors and added to pin 3 of the VCA IC38. This controls the VCA which controls the volume of the analog signal sent from the tone generator section. When the control voltage of the VCA is 0V, the volume is greatest and when it is 0.37V, the volume is least. As you can see from the software flow diagram ○, battery voltage check is performed when the power is turned on. A voltage identical to the volume control voltage is sent to pins of IC35. The output of that is sent to pin 3 of IC18 (battery voltage converter) on the DM board. When the power is turned on, the battery check routine will be entered, and pin 7 of IC35 has been programmed to rise from 0V. As long as the battery voltage is higher than this voltage, the output of IC18 pin 7 will be "High". When this voltage becomes higher than the battery boltage, the output of pin 7 will reverse to "Low". The MPU is checking for this, and when the battery voltage is less than 2.3V, the LCD will show "CHANGE BATTERY".

5) Power supply

The power supply used in the TX7 is of the type know as RCC (Ringing Choke Converter). The basic RCC circuit is shown in diagram 10. Tr_1 is a switching transistor. When this transistor is ON, energy accumulates in inducter L_1 of transformer T, and when OFF, the accumulated energy is released to side L_3. As the transistor Tr_1 repeats this swithcing, power is sent out. R_2 is a base current limiting resistor for Tr_1. R_1 is a starting resistor, and when the resistance is low, Tr_1 will start easier. Transformer T is an oscillating transformer, and isolates the primary and secondary. You may calculate the energy accumulated in transformer T (inductor) using the following equation.

$U = (Vin^2 \times Ton^2)/2L_1$

U = accumulated energy
L_1 = self inductance
Vin = input voltage
Ton = transformer ON time

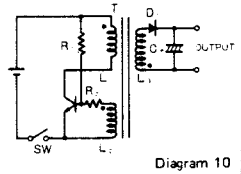

Diagram 10

The operation of the RCC circuit is as follows.
1. When you turn on SW in diagram 10, current flows through R_1 to the base of Tr_1. This turns the Tr_1 on, and current flows in L_1, inducing voltage in L_2.

2. The voltage at point A increases, and works to increase the Tr_1 collector current. Therefore, Tr_1 instantly saturates, and there is no more time difference in the current flowing in L_1, so there is no more induced voltage in L_2. At this time, reverse electromagnetic force (accumulated energy) is generated, and this energy indvces voltage in L_3. When this happens, the base of Tr_1 will have reverse bias because of the reversed e.m.f. in L_2, and Tr_1 will go OFF.
3. Next, when the accumulated energy of L_1 is released, base current flows again to Tr_1 through R_1, and Tr_1 will begin operating again.

   In this way, the desired voltage is attained as the accumulated energy in L_1 is released to L_3 by the switching action of Tr_1.

The following is a block diagram of the TX7 power supply.

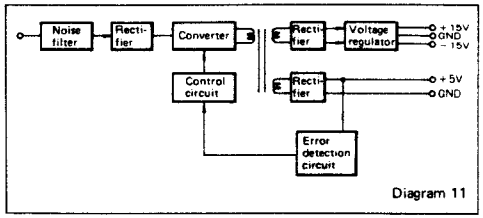

Diagram 11

The actual circuitry of the TX7 is as follows.

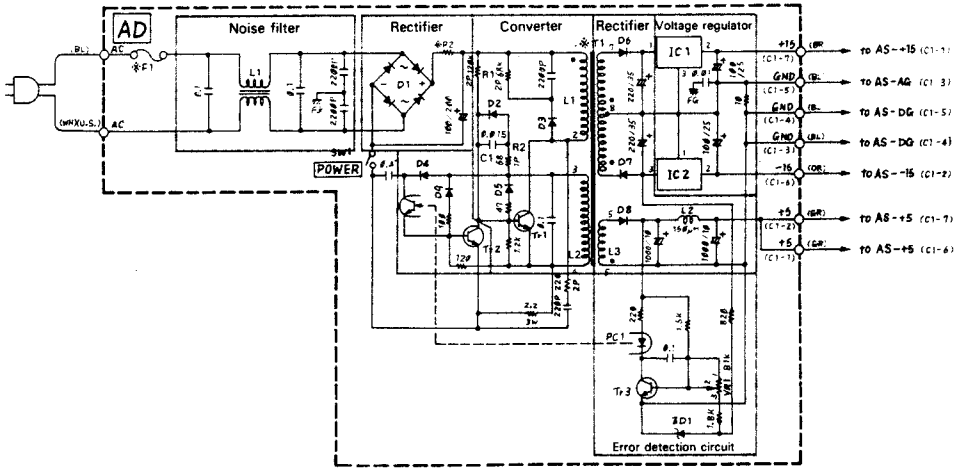

Diagram 12

1. In diagram 12 the base driving circuit is D_2, C_1 and R_2. This controls the base current of Tr_1 through R_2.
2. Tr_2 controls the base current of Tr_1, thus controlling *the voltage that appears in the secondary.*
3. The error detection circuit examines the voltage fluctuation of the +5V, and feeds back the fluctuation to the control circuit through a photocoupler PC_1 (which *electrically isolates the primary and secondary).*
4. On the basis of the information fed back to it, the control circuit increases the base current of Tr_2, and by thus changing the oscillating frequency of Tr_1, controls the output voltage. The output voltage (+5V) may be adjusted using the VR_1 connected to the base of Tr_3 in the error detection circuit.

The power switch SW_1 turns the voltage to the emitter of Tr_1 on and off. Thus, as the converter circuit switches or does not switch, voltage is generated or stopped in the secondary. Therefore, even when the power switch SW_1 is off, voltage is present at the primany, so when servicing, please be careful.

3. Software flow

This is basically the same as the DX7.
The software can be divided into the main routine, timer interrupt routine and ACIA interrupt routine.
Diagram 13 below shows the main routine flow from power on, diagram 14 shows the timer interrupt routine, and diagram 15 shows the ACIA interrupt routine.

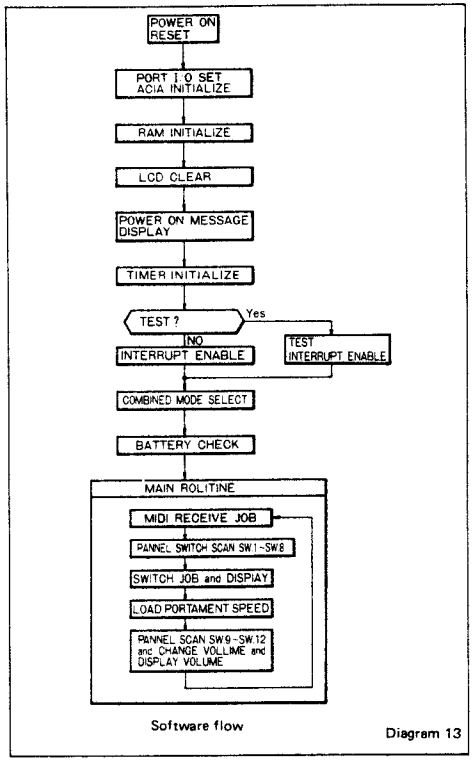

Software flow

Diagram 13

1) Main routine

The data from the ACIA interrupt routine that accumulates in the input buffer is taken out and interpreted one byte at a time. When a complete MIDI message has been assembled, the appropriate operation is performed.
This routine also scans the panel switches and displays and sets the appropriate information.

2) Timer interrupt routine

The internal timer cycles once every 2.6 ms.
This checks MIDI reception for active sensing, panel switches for auto-repeat, and calculates and loads data such as LFO, pitch EG and pitch bender to the tone generator.

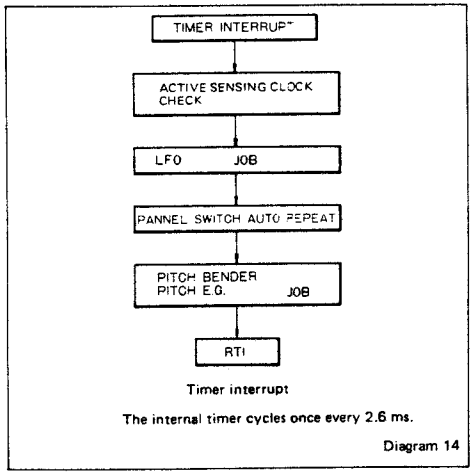

Timer interrupt

The internal timer cycles once every 2.6 ms.

Diagram 14

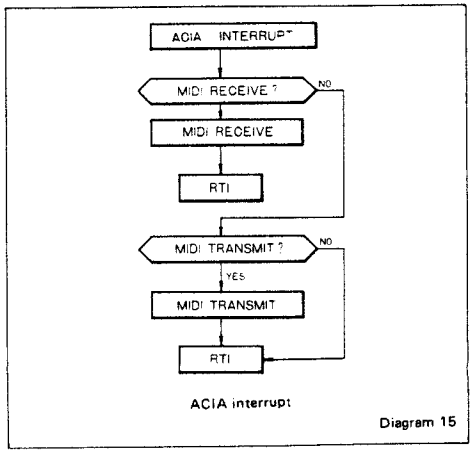

ACIA interrupt

Diagram 15

1. Entering the test program

By turning the power on while pressing the following two switches, you will enter the test program.

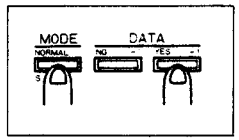

When this appears, you may release the switches.

While pressing, turn the power switch ON.

<< YAMAHA TX7 >>

When this is displayed, continue pressing

TEST y/n ? v1.□·□

Software version number

2. Executing the test program . . . . The tests will be carried out in the order described below. However, you may not return to a previous test.

1) When you respond to "TEST y/n?" by pressing [YES +1], the following tests will be carried out.
   RAM read/write test
   ROM read test
   Backup battery voltage test

2) TEST 1 . . . . When you respond to the battery voltage display by pressing [YES +1], it will proceed to the next test. (You may skip this test.)
   Pitch, volume and volume change test.

3) TEST 2 . . . . When TEST 1 is over (or you press [YES +1]), it will proceed automatically to the next test.
   LCD flash test.

4) TEST 3 . . . . When TEST 2 is over and you press [YES +1], it will proceed to the next test. (This test cannot be skipped.)
   Panel switch test.

5) TEST 4 . . . . When TEST 3 is over and you press [YES +1], it will proceed to the next test. However, you must make the proper settings and connections for this test before entering it. Otherwise, an error will result. (After the display has indicated error, you may proceed to the next test.)
   Cassette interface test.

6) TEST 5 . . . . When TEST 4 is over (or you press [YES +1]), it will automatically proceed to the next test. However unless you make the proper connections and settings before entering this test, you will not be able to proceed to the next test.
   MIDI IN/OUT test.

7) TEST 6 . . . . When TEST 5 is over and you press [YES +1], it will proceed to the next test.
   MIDI THRU circuitry test.

When the above tests have been completed, the display will show [TEST END!] and the TX7 will return to normal operating mode.

3. Details of each test program

1) RAM read · write/ROM read/backup battery voltage test
When you enter the test program and press [YES +1], these tests will be carried out automatically.

① RAM read · write test
This carries out read · write tests on certain bytes of RAM 1 ~ 4. Since not all bytes are tested, the 32 voice data, 32 TX function data, 32 DX function data, voice and edit buffer data will be preserved unchanged.
(Since only part of RAM is tested, it does not guarantee 100% accuracy.)

[Test result]
If everything is OK, it will move to the ROM read test without displaying anything.

[If there is an error]
[ERROR RAM □ !!] will be displayed, and you will not be able to proceed to the next test.
RAM number 1 ~ 4

② ROM read test
If the RAM read · write test was OK, this test will be carried out automatically. It reads the entire program ROM area (except for the check sum data) and does a check sum, which it then compares with the check sum written in ROM.
(The check sum process adds the contents of ROM and comes up with a number which it compares to a stored known correct number.

[Test result]
If everything is OK, it will move to the backup battery voltage test without displaying anything.

[If there is an error]
[ROM TEST ERROR] will be displayed, and you will not be able to proceed to the next test.

③ Backup battery voltage test
If the ROM read test was OK, this test will be carried out automatically. It checks the backup battery voltage and displays the voltage in the LCD.

[Test result]
The backup battery voltage will be displayed in the LCD as follows. If the voltage is below 2.3V, there is a possibility that the memory will not be backed up, so please change the battery.

[BATTERY VOLT = □ . □]
Voltage display

To proceed to the next test, press [YES +1].

[There is no error display.]

2) TEST 1 Audio output pitch and volume, volume check
[TEST 1 PUSH VOL < >] will be displayed, and a sine wave 440Hz ± 0.1Hz will be sent to the output and headphone jacks.
When this test is entered, the volume will be at maximum, ... about 250 mV at the output jack. When you press the [◀] switch, the upper dark section of the LCD will shrink, and the volume will go down. When you press the [▶] switch, the upper dark section of the LCD will grow, and the volume will go up.

[Test result]
Whether or not the test was OK, you may proceed to TEST 2 by pressing [YES +1].

[If there is an error]
The problem is probably in the FM tone generator, DAC, sample and hold, VCA control, or in the analog circuitry.

3) TEST 2 LCD flash test
All dots of the LCD will flash on and off.

[Test result]
When it is OK, you may proceed to TEST 3 pressing [YES +1].

[There is no display.]

4) TEST 3 Panel switch test
[TEST 3 NOW SW. □□ ?] will be displayed. When you press the left switch ([LOW] switch), the switch number will be displayed like this; [TEST 3 NOW SW. □□ 1]. Continue pressing switches from left to right and each switch number will be displayed.

[Test result]
If all switches are OK, [PANEL SWITCH OK] will be displayed. To continue to TEST 4, press [YES +1].

NOTE:
Before you press [YES +1] to go to the next test, make the connections for TEST 4. If you proceed without making the connections, [CASSETTE ERROR] will be displayed.

[If there is an error]
There is no error display, but you will not be able to proceed to the next test.

5) TEST 4 Cassette interface test
When you finish TEST 3 and [PANEL SWITCH OK] is displayed, make the connections as shown below and press [YES +1]. The cassette interface test will be carried out automatically.

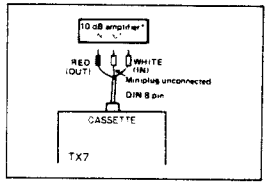

*Use an 10 dB amplifier or set a cassette deck to REC/PAUSE and adjust it so that there is 10 dB gain.

[Test result]
If everything is OK, [CASSETTE OK!] will be dispalyed, and you may proceed to TEST 5 by pressing [YES +1].

NOTE:
Before pressing [YES +1] and advancing to TEST 5, make the connections for TEST 5. If you proceed to TEST 5 without doing this, the display will read [CONNECT MIDI I/O].

[If there is an error]
If you did not make the connections, if the connections were incorrect, if gain was insufficient, or if there is a hardware malfunction, the display will read [CASSETTE ERROR]. If this happens, turn off the power, recheck connections and gain, enter test mode and try again.
Even if [CASSETTE ERROR] is displayed, you may proceed to TEST 5 by pressing [YES +1].

6) TEST 5 MIDI IN/OUT test
When you finish TEST 4 and [CASSETTE OK!] or [CASSETTE ERROR] is displayed, connect the MIDI terminals as shown below and press [YES +1]. The MIDI interface IN/OUT will automatically be tested.

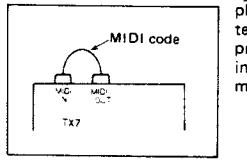

[Test result]
If everything is OK, [MIDI TEST OK!] will be displayed. You may then proceed to TEST 6 by pressing [YES +1].

NOTE:
When you press [YES +1], TEST 6 will automatically begin, so before proceeding, make the connections for TEST 6.

[If there is an error]
If you did not make the connections or if the connection is faulty, [CONNECT MIDI I/O] will be displayed, and you will not be able to proceed to the next test, so make the correct connections.
If there is a hardware error in the MIDI IN/OUT interface, [MIDI TEST ERROR] will be displayed, and you will not be able to proceed to TEST 6. Please check the hardware.

7) TEST 6 MIDI THRU circuitry test
When you have made connections as shown below, the LCD will display [LISTEN EXT. TX7!] and the tone generator will produce sound. In this way, you can check the MIDI THRU hardware.

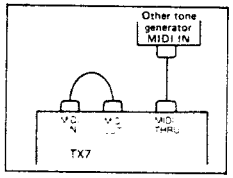

*You may use any MIDI instrument as a tone generator. For example TX7, DX7, etc.

[Test result]
If everything is OK, the following MIDI data will be sent from MIDI THRU. When all the data has been sent, [TEST END!!] will be displayed and the TX7 will return to normal operating mode (combined mode).
Output data (Hexadecimal) "○" symbol indicates time gap.

90, 45, 7F, ○ 45, 00, 51, 7F, ○ 51, 00, 45, 7F, BO, 40, 7F, ○
(A4 max volume Key ON / Key OFF / A5 max volume Key ON / Key OFF / A4 Key ON / Sustain ON)
90, 45, 00, 41, 7F, 51, 00, 45, 7F, BO, 41, 00, 07, 7F,
(A4 Key OFF / A5 Key ON / Key OFF / A4 Key ON / Sustain OFF / Portamento ON)
90, 45, 00, 51, 7F, 51, 00, 45, 7F, BO, 41, 00, 07, 60,
(A4 Key OFF / A5 Key ON / A5 Key OFF / A4 Key ON / Sustain OFF / Volume setting)
90, 45, 00, 51, 7F, 51, 00, 45, 7F, BO, 07, 7F, 01, 7F
(A4 Key OFF / A5 Key ON / A5 Key OFF / A4 Key ON / Volume max / Modulation max)
90, 45, 00, 51, 7F, 51, 00, 45, 7F, BO, 01, 00
(A4 Key OFF / A5 Key ON / A5 Key OFF / A4 Key ON / Lower modulation)
E0, 7E, 7F, ○ 90, 45, 00, 51, 7F, ○ 51, 00, E0, 00, 40,
(Pitch bend max up / A4 Key OFF / A5 Key ON / A5 Key OFF / Pitch bend normal position)

[If there is an error]
There is no error display. If you were unable to verify data transmission, check MIDI hardware.

■ DISASSEMBLY IN STRUCTIONS

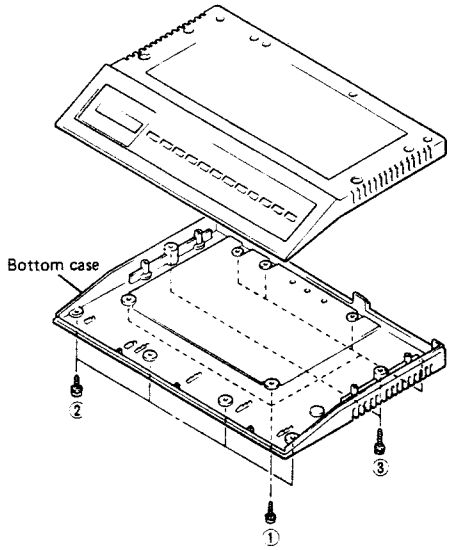

1. Removing the Bottom case
   Remove 6 screws ① , 4 screws ② , and 2 screws ③ .
2. Removing the DM Board Ass'y
   (1) Remove the Bottom case.
   (2) Remove 2 screws ④ .
3. Removing the LCD Ass'y
   (1) Remove the Bottom case.
   (2) Remove 2 screws ⑤ .

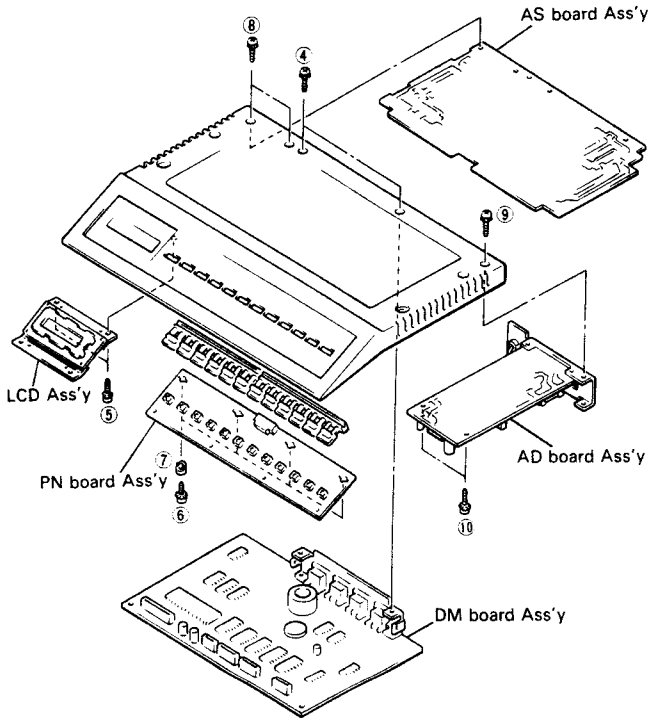

4. Removing the PN Board Ass'y
   (1) Remove the Bottom case.
   (2) Remove 4 screws ⑥ and 4 nylon washers ⑦ .
5. Removing the AS Board Ass'y
   (1) Remove the Bottom case.
   (2) Remove the DM Borad Ass'y.
   (3) Remove 2 screws ⑧ .
6. Removing the AD Board Ass'y
   (1) Remove the Bottom case.
   (2) Remove screw ⑨ and 2 screws ⑩ .

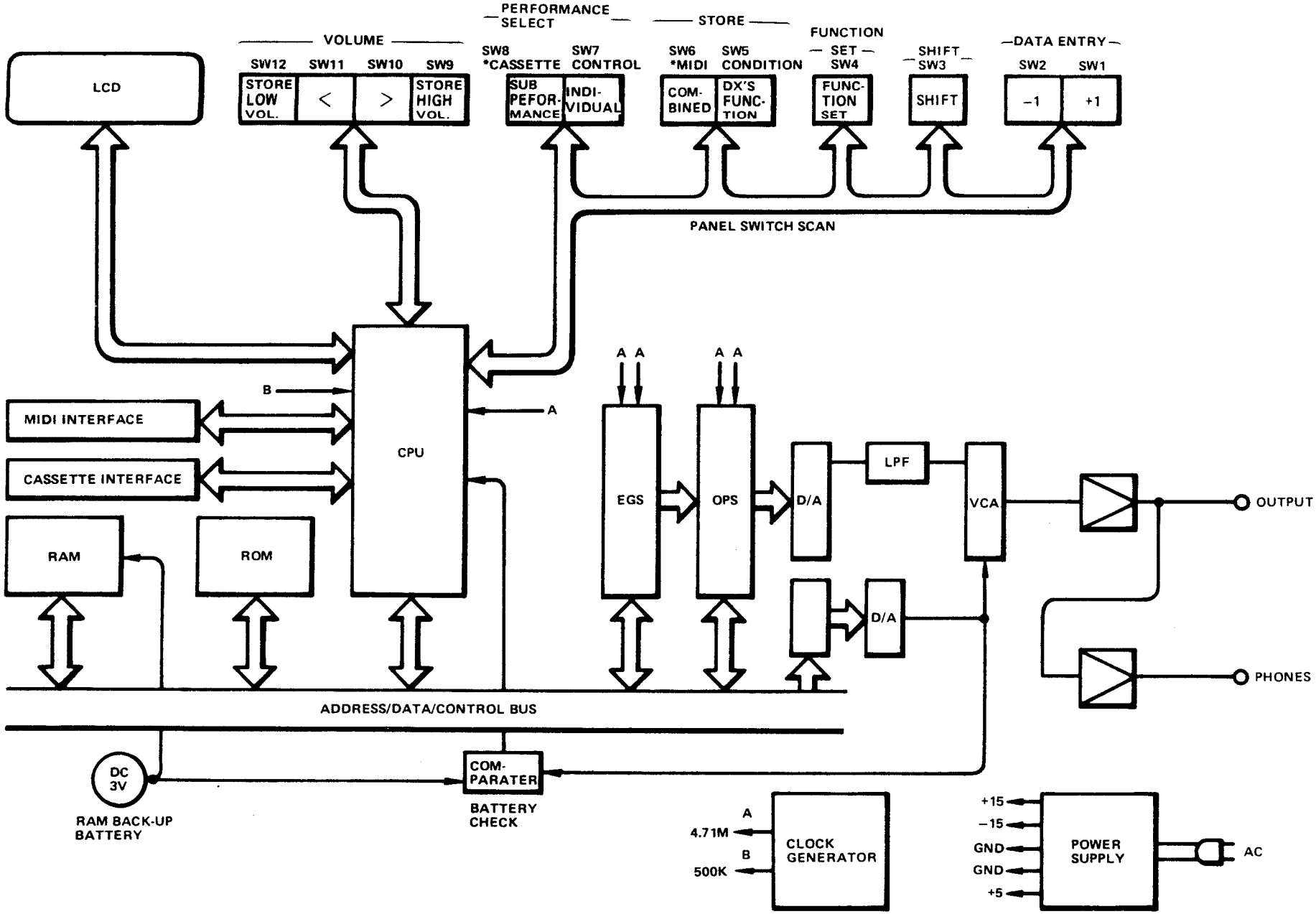
PERFORMANCE SELECT
STORE
FUNCTION SET
VOLUME
DATA ENTRY
SW12
SW11
SW10
SW9
SW8 *CASSETTE
SW7 CONTROL
SW6 *MIDI
SW5 CONDITION
SW4
SW3
SW2
SW1
LCD
STORE LOW VOL.
<
>
STORE HIGH VOL.
SUB PEFOR-MANCE
INDI-VIDUAL
COM-BINED
DX'S FUNC-TION
FUNC-TION SET
SHIFT
-1
+1
PANEL SWITCH SCAN
B
A
MIDI INTERFACE
CASSETTE INTERFACE
CPU
A A
A A
EGS
OPS
D/A
D/A
LPF
VCA
OUTPUT
PHONES
RAM
ROM
ADDRESS/DATA/CONTROL BUS
DC 3V
RAM BACK-UP BATTERY
COM-PARATER
BATTERY CHECK
A
4.71M
B
500K
CLOCK GENERATOR
+15
-15
GND
GND
+5
POWER SUPPLY
AC

- CIRCUIT BOARDS
  - AD CIRCUIT BOARD

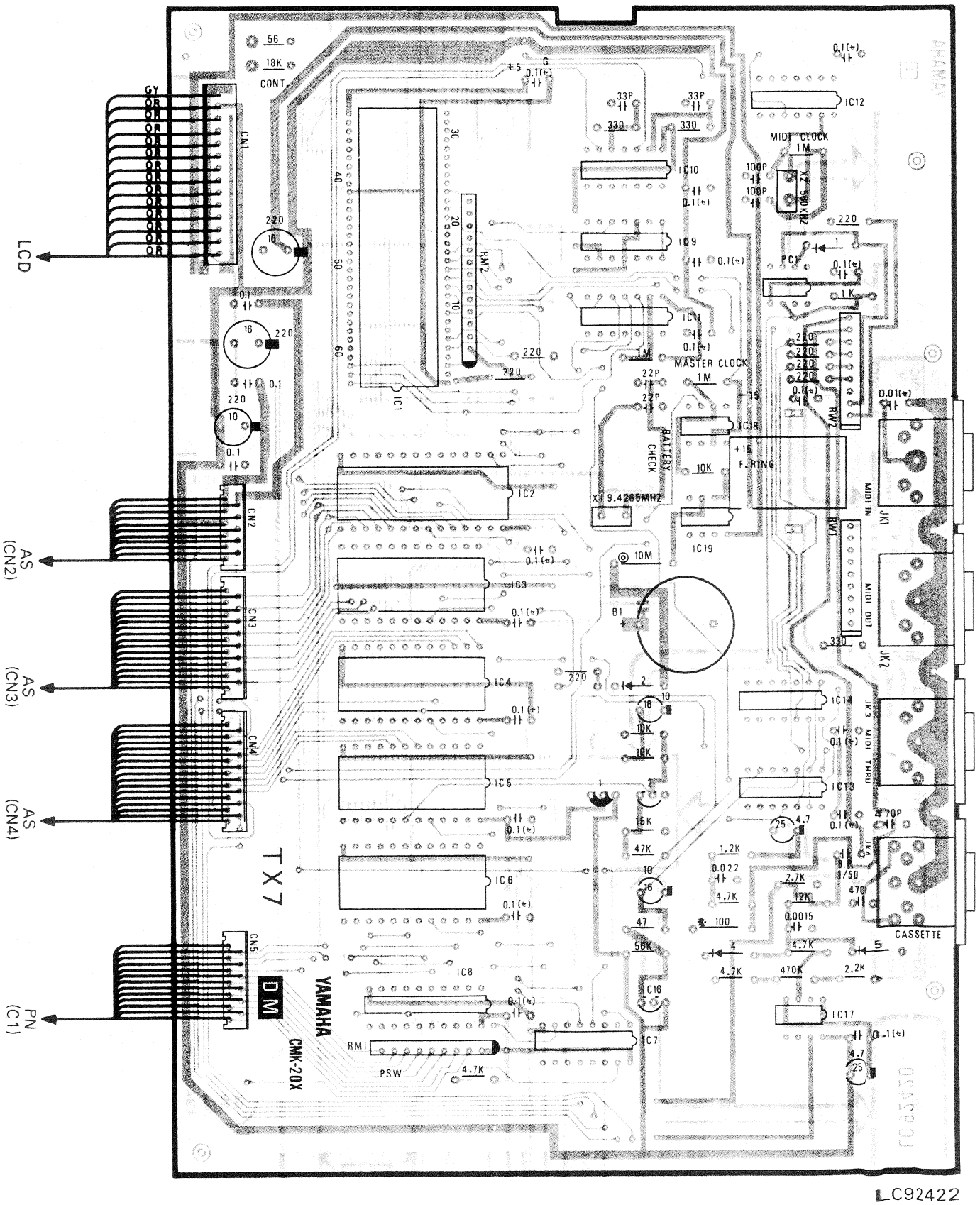

• AS CIRCUIT BOARD

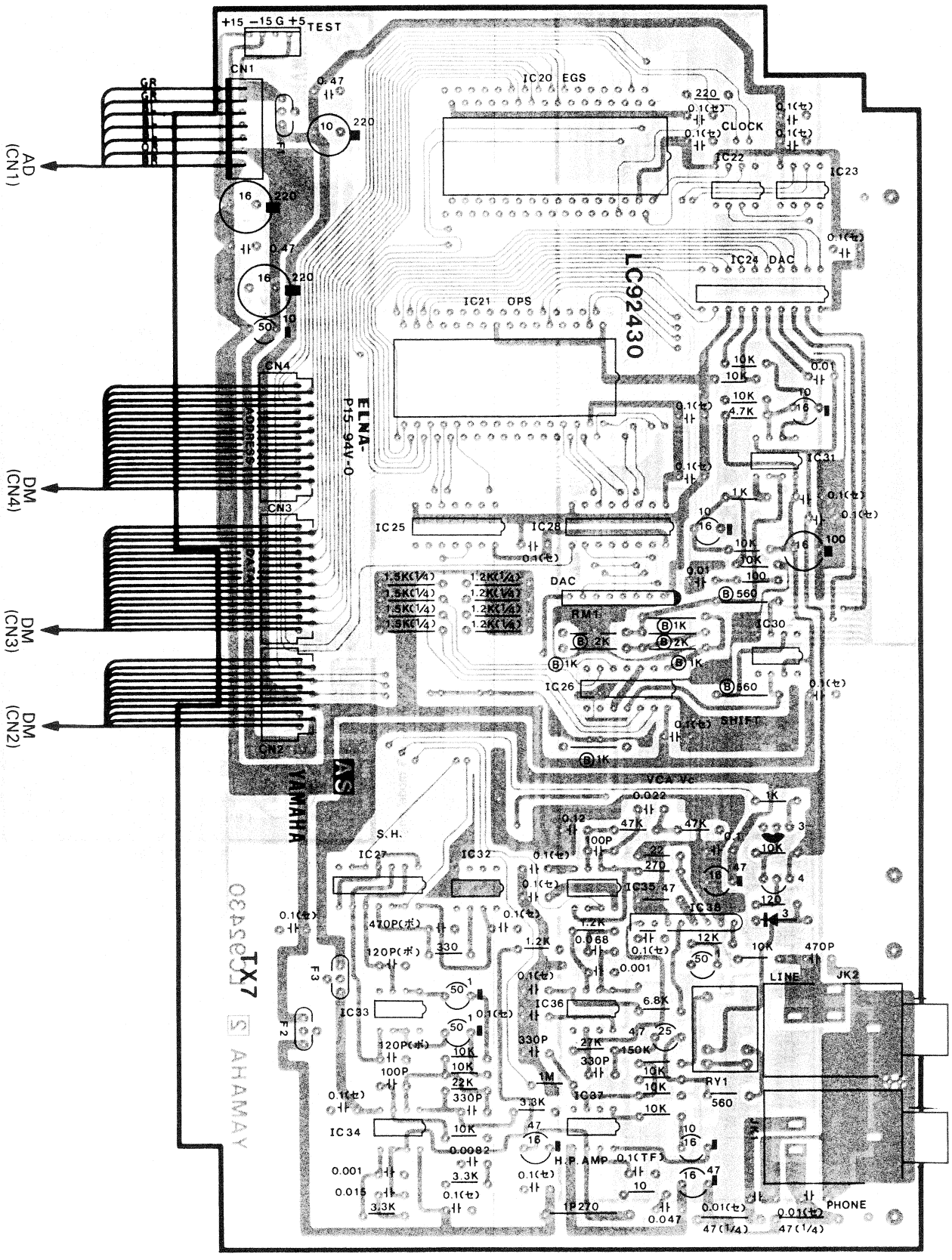

LC924302

• PN CIRCUIT BOARD

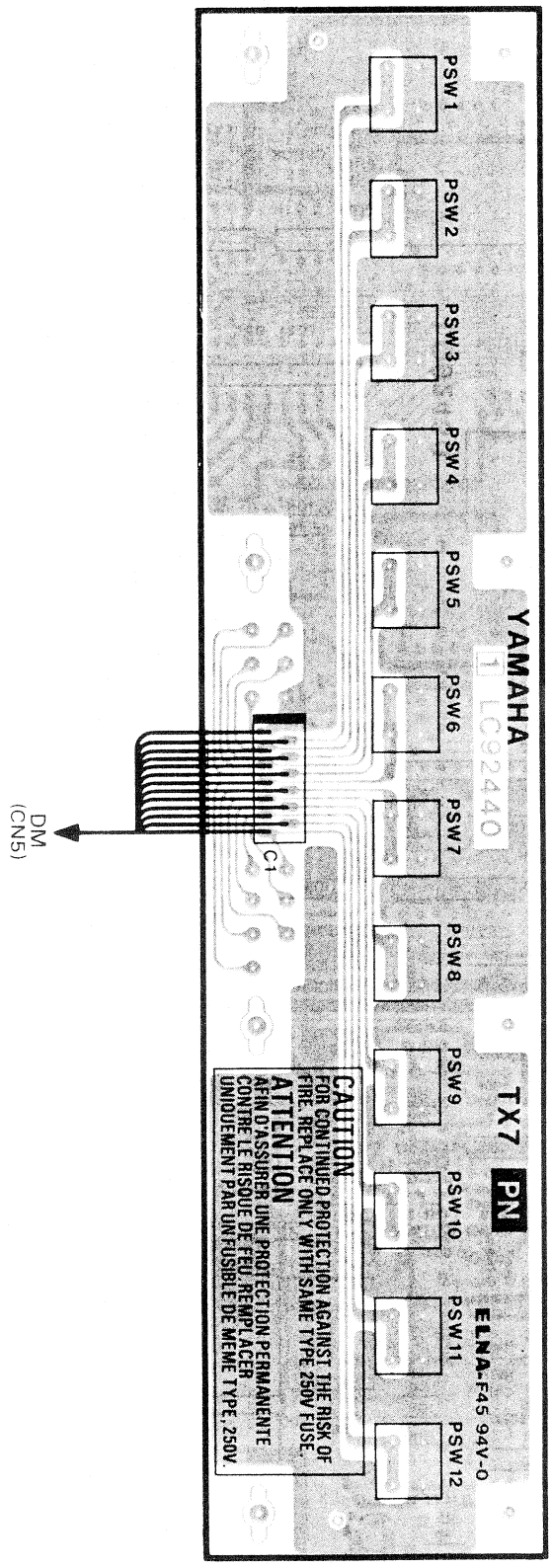

LC92441

• AD CIRCUIT BOARD

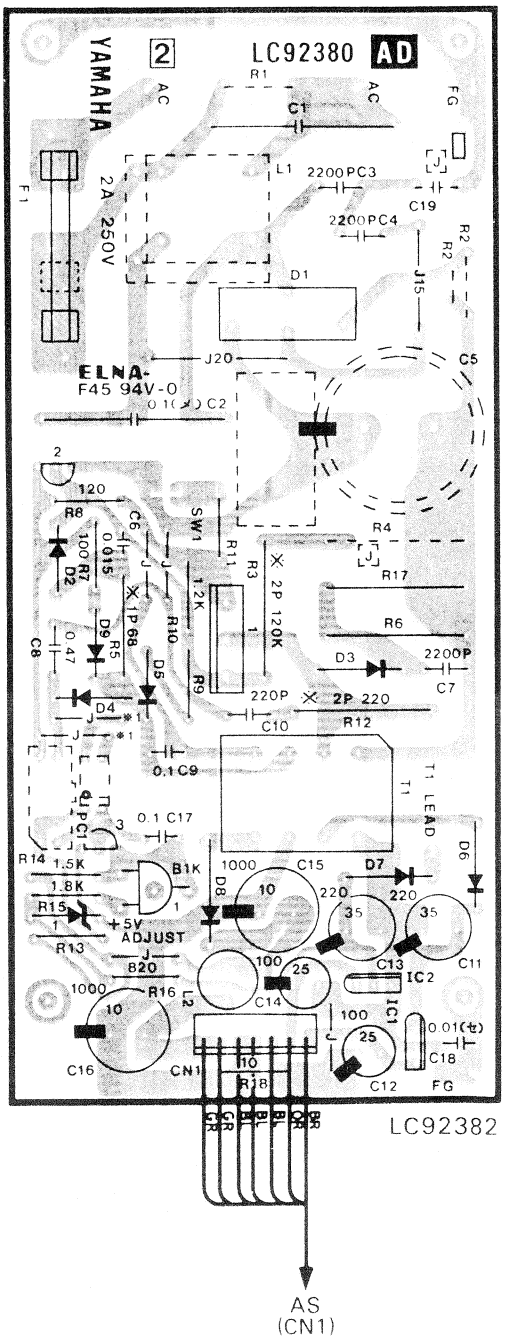

LC92382

(*1 J.U.C. WG model only)

PARTS LIST

Notes DESTINATION ABBREVIATIONS
J : Japan C : Canadian
G : General WG : West Germany
U : U.S.A A : Australian

• PC BOARD PARTS

	Ref. No.	Part No.	Description		部品名	Remarks	Common Model	Markets	ランク
※		***NA 81 43 00***	***DM Circuit Board***		DMシート				
		FZ 00 41 00	Ceramic Cap.	0.1μF/16V	半導体セラコン				
		Ui 23 71 00	Electroltic Cap.	10μF/16V	小型ケミコン				
		UJ 13 82 20	〃	220μF/16V	〃				
		Ui 24 64 70	〃	4.7μF/25V	〃				
		FM 11 61 00	B.P Cap.	1μF/50V	B.P コン	≒4601～			
		Hi 20 99 90	Carbon Composition Resistor	10M	ソリッド抵抗				
		HZ 00 31 90	MDULE Resistor	4.7kΩ×8 9P	モジュール抵抗				
※		HZ 00 48 10	〃	4.7kΩ×12 13P	〃				
		iA 10 15 20	Transistor	2SA1015(O,Y)	トランジスタ				
		iC 18 15 80	〃	2SC1815(Y,GR)	〃				
		iF 00 34 50	Diode	1SS133	ダイオード				
※		iN 01 11 10	IC	EPROM27128	IC	V1.1			
※		iN 01 11 20	〃	EPROM27128	〃	V1.2			
※		iG 14 07 00	〃	HD63A03X	〃				
		iG 10 62 00	〃	M5M5118P-15I	〃				
		iG 10 67 00	〃	74LS138	〃				
		iG 06 81 00	〃	TC40H240	〃				
		iG 05 10 00	〃	TC40H004	〃				
		iG 09 64 00	〃	TC40H008	〃				
		iG 05 11 00	〃	TC40H074	〃				
		iG 00 17 20	〃	TC4069UBP	〃				
		iG 10 55 00	〃	HD7405P	〃				
		iG 11 62 00	〃	PST518	〃				
		iG 13 49 00	〃	IR9311	〃				
		iG 10 70 00	〃	NJM072	〃				
		iR 00 14 00	〃	TC74HC14BP	〃				
		iK 00 04 70	Photo Conductor	TLP552	フォトカプラー				
		LB 91 81 40	XH Connector	14P	XHコネクター				
※		LB 01 81 10	Card Fit Connector	11P	カードフィットコネクター				
※		LB 01 81 30	〃	13P	〃				
※		LB 01 81 70	〃	17P	〃				
		LB 50 05 20	DIN Jack	5P	DINジャック				
		LB 60 37 10	〃	8P	〃				
		LB 60 60 50	Socket IC	28P	ICソケット				
※		PC 90 00 60	Lithium Battery	CR2032-IHS	リチュウム電池				
		QU 00 47 00	Sela Lock		セラロック	500KHz			
		QU 00 52 00	Quartz Crystal		水晶振動子	9.4265MHz			
※		***NA 81 43 10***	***AS Circuit Board***		ASシート				
		FZ 00 41 00	Cermic Cap.	0.1μF/16V	半導体セラコン				
		Fi 36 42 20	Electro Magnetic Interference	0.022μ	エミフィル				
		Ui 23 71 00	Electroltic Cap.	10μF/16V	小型ケミコン				
		Ui 33 74 70	〃	47μF/16V	〃				

※New Parts (新規部品)

	Ref. No.	Part No	Description		部品名	Remarks	Common Model	Markets	ランク
		UJ 13 81 00	Electroltic Cap.	100μF/16V	小型ケミコン				
		UJ 13 82 20	〃	220μF/16V	〃				
		UJ 36 61 00	〃	1μF/50V	〃				
		UJ 16 71 00	〃	10μF/50V	〃				
		UK 34 64 70	B.P Cap.	4.7μF/25V	B.P コン				
		FM 11 61 00	〃	1μF/50V	〃				
		FT 55 21 20	Polypropylene Cap.	120PF	P.P コン				
		FT 55 24 70	〃	470PF	〃				
*		HZ 00 50 60	Metal Film Resistor	560Ω	金属抵抗				
		HZ 00 17 30	〃	1kΩ	〃				
		HZ 00 17 40	〃	2kΩ	〃				
*		HZ 00 47 80	Module Resistor	6bit DAC PKC6L103	モジュール抵抗				
		iA 10 15 20	Transistor	2SA1015(O,Y)	トランジスタ				
		iC 21 20 00	〃	2SC2120(O,Y)	〃				
		iF 00 34 50	Diode	1SS133	ダイオード				
		iG 10 60 00	IC	BA9221	IC				
		iG 04 38 00	〃	HD7417P	〃				
		iG 00 16 90	〃	TC4016BP	〃				
		iG 00 12 70	〃	TC4066BP	〃				
		iG 06 41 00	〃	TC40H174P	〃				
		iG 10 71 00	〃	LF356N	〃				
		iG 00 13 90	〃	4558DV	〃				
		iG 10 70 00	〃	NJM072	〃				
		iG 05 66 00	〃	NJM386	〃				
		iG 07 95 00	〃	T6400	〃				
		iG 06 25 00	〃	UPC1252H2	〃				
		iT 21 28 00	〃	YM2128OOPS	〃				
		iT 21 29 00	〃	YM2129OEGS	〃				
		KC 00 12 50	Relley	MZ12	リレー				
		LB 91 80 70	XH Connector	T.E 7P	XHコネクター				
*		LB 01 81 10	Card Fit Connector	T.E. 11P	カードフィットコネクター				
*		LB 01 81 70	〃	T.E. 17P	〃				
		LB 40 05 70	XH Connector	T.E. 4P	XHコネクター				
*		LB 20 30 20	Jack, Phone Mono		ジャック・モノ				
*		LB 30 23 60	Jack, Phone Stereo		ジャック・ステレオ				
*		***NA 81 43 20***	***PN Circuit Board***		PNシート				
*		KA 90 70 30	Key Switch		タクトスイッチ				
*		*LB 01 91 30*	*Card Fit Connector*	*13P*	カードフィットコネクター				

*New Parts (新規部品)

	Ref. No.	Part No	Description		部品名	Remarks	Common Model	Markets	ランク
*		***NA 81 43 30***	***AD Circuit Board***		ADシート			***J***	
*		***NA 81 43 40***	〃		〃			***U***	
*		***NA 81 43 50***	〃		〃			***G***	
*		***NA 81 43 60***	〃		〃			***C***	
*		***NA 81 48 10***	〃		〃			***WG.A***	
*		FR 20 31 00	Metalized Polyester Film Cap	0.1μF	メタライストポリエステルフィルム	C2			
*		FR 20 31 00	〃	0.1μF	〃	C1		J.U.C	
*		FR 20 32 20	〃	0.22μF	〃	C1		G.WG	
*		FZ 00 68 60	AL. Electroltic CAP	1000μF/10V	ケミカルコンデンサー	C15,16			
*		FZ 00 74 40	〃	100μF/25V	〃	C12,14			
*		FZ 00 68 40	〃	220/25V	〃	C11,13			
*		FZ 00 68 80	〃	100μF/200V	〃	C5		J.U.C	
*		FZ 00 68 90	〃	47μF/400V	〃	C5		G.WG	
		HL 31 46 80	Metal Oxide Film Resistor	68Ω/1W	サンキン抵抗	R5			
		HL 32 52 20	〃	220Ω/2W	〃	R12		J.U.C	
		HL 32 81 20	〃	120kΩ/2W	〃	R3			
		HL 32 81 20	〃	120kΩ/2W	〃	R4,6		G.WG	
		HL 32 76 80	〃	68kΩ/2W	〃	R6		J.U.C	
		HL 32 81 20	〃	120kΩ/2W	〃	R17		G.WG	
*		HZ 00 48 40	Thermal Fusing Resistor	10Ω/2W	抵抗温度ヒューズ	R2		C	
*		HZ 00 48 50	Wire Wound Resistor	10Ω/3W	セメント抵抗	R2		J.U	
*		HZ 00 48 60	〃	22Ω/3W	〃	R2		G.WG	
*		HZ 00 48 70	〃	2.2Ω/3W	〃	R11		L.U.C	
*		HZ 00 48 80	〃	4.7Ω/3W	〃	R11		G.WG	
		iC 26 55 00	Transistor	2SC2655	トランジスタ	TR2			
		iC 26 34 00	〃	2SC2634	〃	TR3			
*		iC 27 92 00	〃	2SC2792	〃	TR1		G.WG	
*		iC 25 55 00	〃	2SC2555	〃	TR1		J.U.C	
		iF 00 13 80	Diode	1SS84	ダイオード	D4,5,9			
		iH 00 12 20	〃	S2K20	〃	D8			
*		iF 00 85 90	〃	ERB4402	〃	D6,7			
*		iH 00 17 40	〃	ERB4406	〃	D3			
*		iH 00 17 50	〃	ERB4302	〃	D2			
*		iH 00 17 10	Diode Bridge	SIRBA40	ダイオードブリッジ	D1		J.U.C	
*		iH 00 17 20	〃	SIRBA60	〃	D1		G.WG	
		iF 00 14 70	Zener Diode	RD6.2EB2	ツェナーダイオード	ZD1			
		iG 06 39 00	IC	1AμPC7815H	IC	IC1			
		iG 07 75 00	〃	1AμPC7915H	〃	IC2			
*		iK 00 04 80	Photo Conductor	PC817	フォトカプラー	PC1		J.U.C	
*		iK 00 04 90	〃	PC511	〃	PC1		G.WG	
		GA 84 14 00	Transformer	TYA018	トランス	T1		C	
*		GA 83 91 00	〃	TM205	〃	T1		J.U	
*		GA 83 95 00	〃	TM206	〃	T1		G.WG	
*		GE 30 08 20	Coil	150μH	コイル	L2			
*		GD 90 07 60	AC Line Filter	PLA3021A	ACラインフィルタ	L1		J.U.C	
*		GD 90 07 90	〃	R5E203A	〃	L1		G.WG	
		HT 57 05 40	Semi Variable Resistor	B1K	半固定VR	VR1			
		KB 00 03 50	Fuse	2A 250V				J	
		KB 00 12 40	〃	2A 250A				U.C	
		KB 00 07 10	〃	T500mA 250A				G.WG	
		LB 60 24 60	NH Connector	T.E. 7P					
		LB 20 15 30	Fuse Holder Pin						

*New Parts (新規部品)

■ DISASSEMBLY VIEW

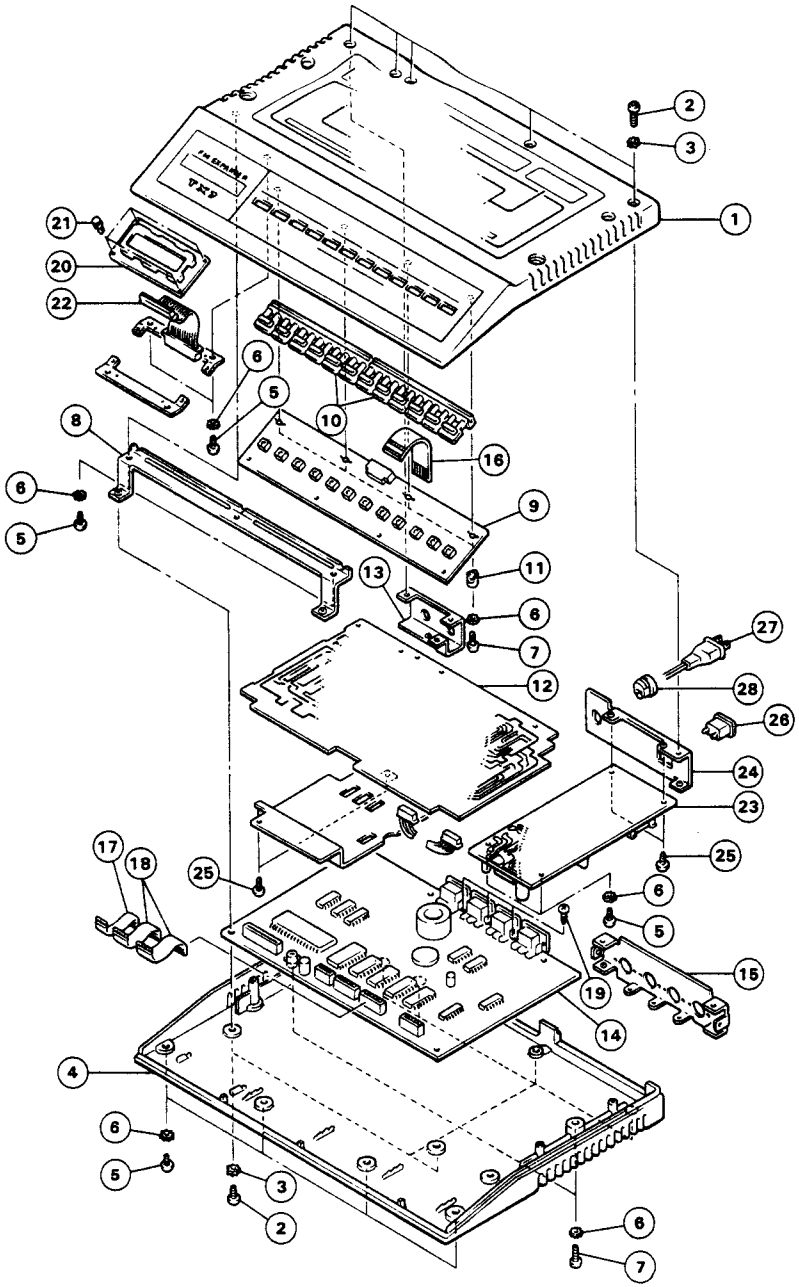

■ PARTS LIST

• MECHANISM CHASSIS UNIT

	Ref. No.	Part No.	Description		部品名	Remarks	Common Model	Markets ランク
*	1	NX 80 13 40	Top Cover		トップカバー			U
*	〃	NX 80 13 50	〃		〃			J,C,G, WG,A
	2	ED 33 01 06	Bind Head Screw	3×10 BL	バインド小ネジ			
	3	EV 41 00 00	Toothed Lock Wacher	M3 BL	歯付座金			
*	4	NB 83 15 10	Bottom Cover		ボトム			U
*	〃	NB 83 27 00	〃		〃			J,C,G, WG,A
	5	Ei 34 00 86	Bind Tapping Screw	4×8 BL	バインドタッピンネジ			
	6	EV 40 30 46	Toothed Lock Wacher	M4	歯付座金			
	7	Ei 34 01 26	Bind Tapping Screw	4×12 BL	バインドタッピンネジ			
*	8	AA 83 26 70	Circuit Board Rail		シートレール			
*	9	NA 81 43 20	PN Circuit Board		PNシート			
*	10	CB 83 53 80	Key Top		スイッチツマミ			
*	11	CB 83 53 90	Spacer		スペーサ			
*	12	NA 81 43 10	AS Circuit Board		ASシート			
*	13	AA 83 27 20	ANGLE JK		ジャックアングル			
*	14	NA 81 43 00	DM Circuit Board		DMシート			
*	15	AA 83 27 30	ANGLE DIN		DINアングル			
*	16	Mi 80 37 30	Card Wire	13P	スミカード			
*	17	Mi 80 37 50	〃	11P	〃			
*	18	Mi 80 37 40	〃	17P	〃			
	19	ED 33 00 66	Bind Head Screw	3×6 BL	バインド小ネジ			
	20	NA 81 44 10	LCD Module	JN200060	LCDモジュール			
*	21	CB 83 56 50	Nylon Rivet		ナイロンリベット			
*	22	MZ 82 12 80	Wiring	LCD to DM	ワイヤ			
*	23	NA 81 43 30	AD Circuit Board		ADシート			J
*	〃	NA 81 43 40	〃		〃			U
*	〃	NA 81 43 50	〃		〃			G
*	〃	NA 81 43 60	〃		〃			C
*	〃	NA 81 48 10	〃		〃			WG,A
*	24	AA 83 26 80	Panel AC		ACパネル			J
*	〃	AA 83 26 90	〃		〃			U
*	〃	AA 83 27 00	〃		〃			C
*	〃	AA 83 27 10	〃		〃			G
*	〃	AA 83 34 40	〃		〃			WG
	25	ED 34 00 86	Bind Head Screw	4×8 BL	バインド小ネジ			
*	26	KA 10 11 20	Power Switch		シーソースイッチ			
	27	MG 00 06 00	Power Cord		電源コード			J
	〃	MG 00 01 00	〃		〃			U
	〃	MG 00 01 30	〃		〃			A
	〃	MG 00 02 70	〃		〃			C
	〃	MG 00 08 60	〃		〃			G
	〃	MG 00 04 50	〃		〃			WG
	28	CB 03 28 40	Cord Stopper		コードストッパー			WG,A
	〃	CB 06 86 30	〃		〃			J
	〃	CB 07 27 50	〃		〃			G
	〃	CB 80 68 50	〃		〃			C
	〃	CB 81 12 30	〃		〃			U

*New Parts (新規部品)

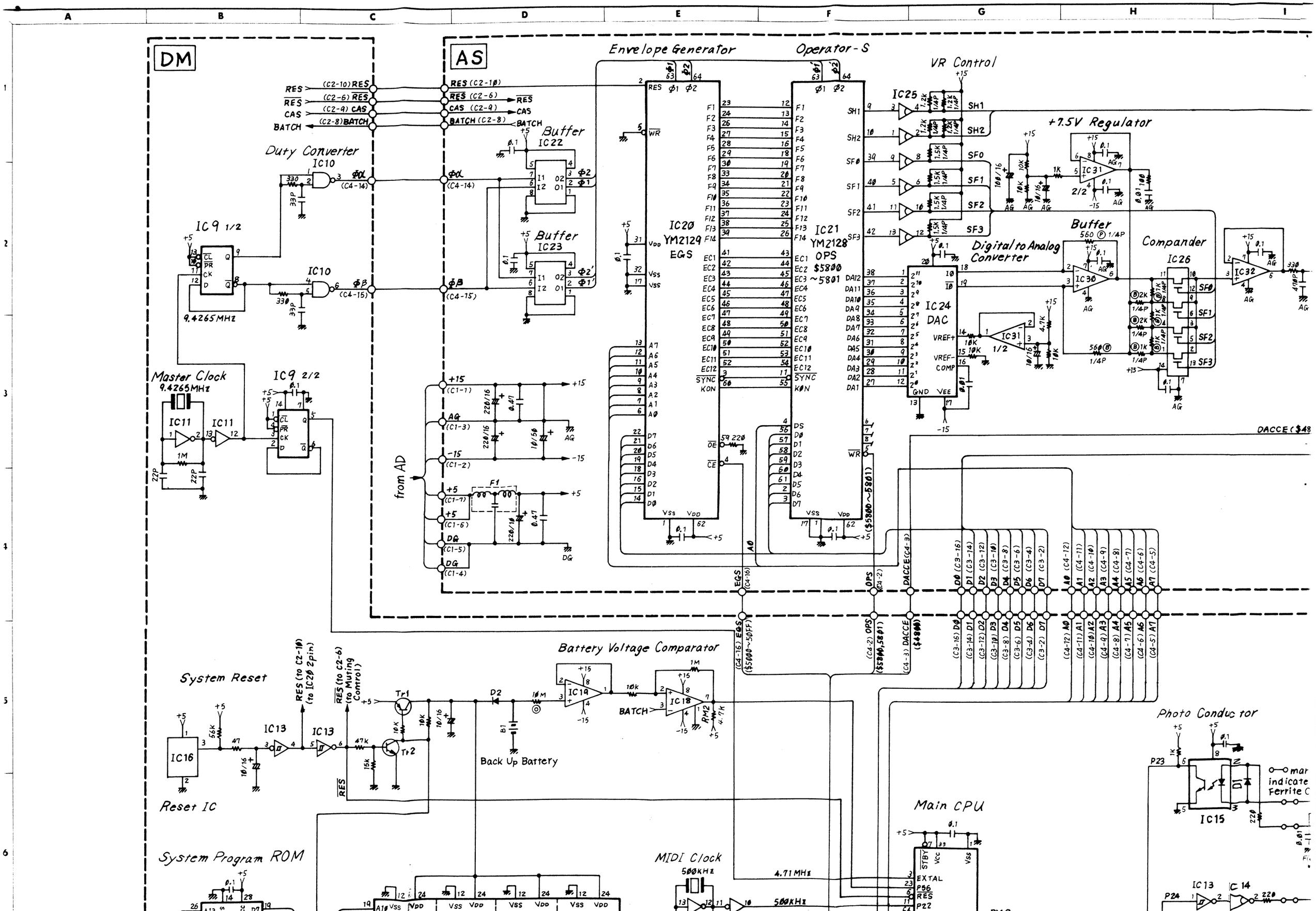

DM
AS
Envelope Generator
Operator-S
VR Control
+7.5V Regulator
Buffer
Duty Converter
IC10
IC9 1/2
9.4265MHz
Buffer
IC22
Buffer
IC23
IC20
YM2129
EGS
IC21
YM2128
OPS
$5800~5801
IC25
Digital to Analog Converter
IC24
DAC
Buffer
Compander
IC26
IC30
IC31
IC32
Master Clock
9.4265MHz
IC11
IC9 2/2
from AD
DACCE ($48
Battery Voltage Comparator
System Reset
IC16
IC13
Tr1
Tr2
Back Up Battery
IC19
IC18
Reset IC
Photo Conductor
IC15
Main CPU
System Program ROM
MIDI Clock
500KHz
4.71MHz

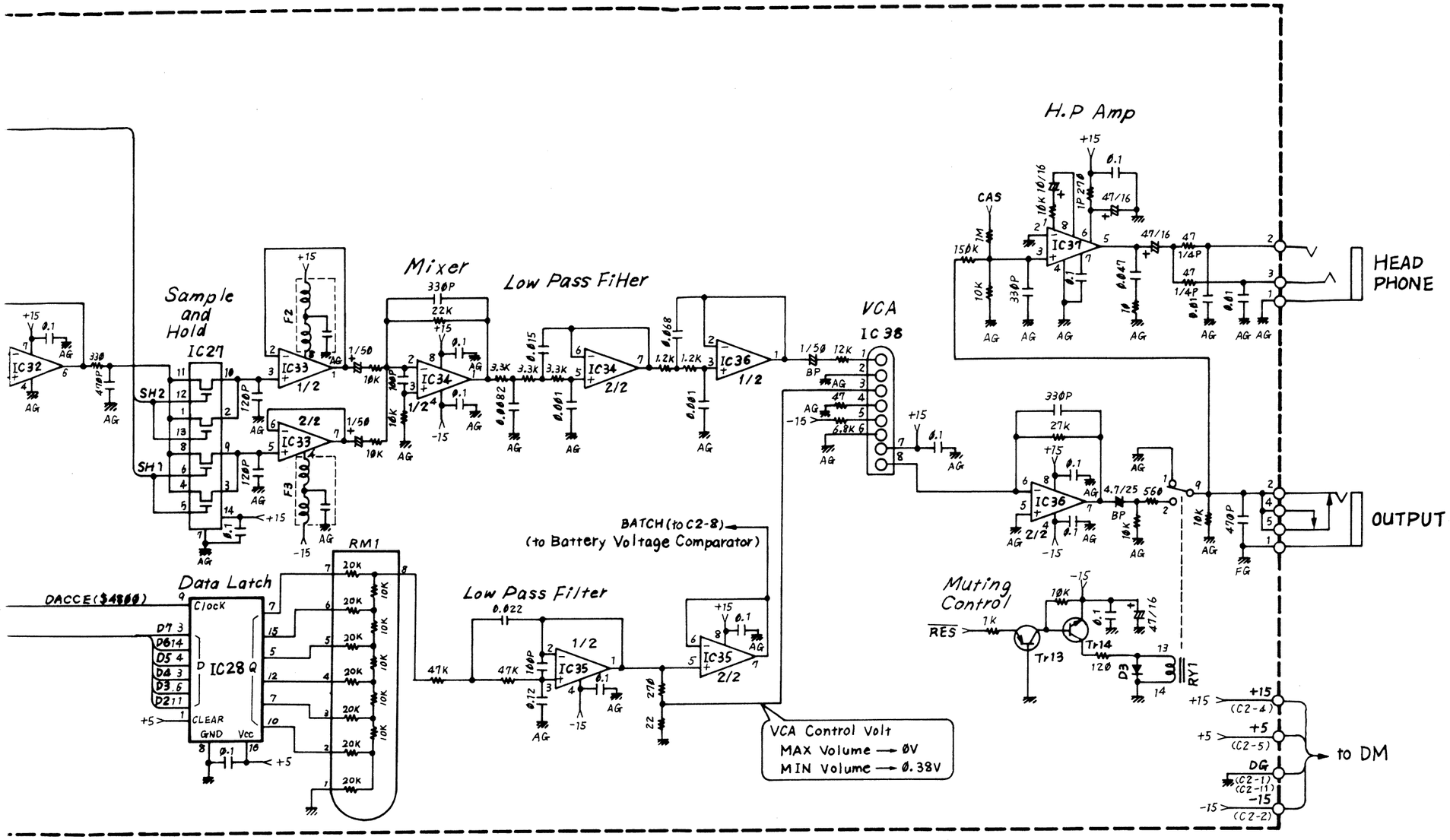

Notes)
DM Circuit Board

IC1	;HD63A03X	(iGL07○0)
IC2	;EPROM 27128	(iNO11○0)
IC3~6	;M5M5118P-151	(iGO42○0)
IC7	;74LS138	(iGL67○0)
IC8	;TC40H240	(iGO81○0)
IC9	;TC40H074	(iGO11○0)
IC10	;TC40H008	(iGO64○0)
IC11	;TC40H004	(iGO10○0)
IC12	;TC4069UBP	(iGO17○0)
IC13	;TC40HC14BP	(iRO14○0)
IC14	;HD7405P	(iGL55○0)
IC15	;TLP552	(iKO047○)
IC16	;PST518	(iGL62○0)
IC17,18	;IR9311	(iGL49○0)
IC19	;NJM072	(iGL70○0)
Tr1	;2SA1015 (O,Y)	
Tr2	;2SC1815 (Y,GR)	
D1,2,4,5	;1SS133	

Reset IC

System Program ROM

IC 2 ROM $C000 ~FFFF

IC3 RAM $6000 ~67FF

IC4 RAM $6800 ~6FFF

IC5 RAM $7000 ~77FF

IC6 RAM $7800 ~7FFF

MIDI Clock

500KHz

4.71MHz

IC12

Address Decoder

IC7

IC11

Main CPU

IC1 MPU HD63A03X

RM2 4.7K×9

IC15

IC13 IC14

Cassette Level Comparator

IC17

IC13

P24 P23 P57 P20

CAS (to

FG

D7 D6 D5 D4 D3 D2 D1 D0 E R/W RS

SW12 SW11 SW10 SW9

IC8 $4000

RM1 4.7K×8

SW8 SW7 SW6 SW5 SW4 SW3 SW2 SW1

from AS

+15 (C2-4)

DAG (C2-1)

-15 (C2-2)

+5 (C2-5)

DG (C2-11)

AG

※1

IC2 ROM	Jumper	220Ω Resistor
27128	×	○
27256	○	×

PN

PRESET VOLUME — LOW (SW12) ◄ (SW11) ► (SW10) HIGH (SW9)

PROGRAM CHANGE — COMBINED SAVE/VERIFY (SW8) INDIVIDUAL LOAD/PROT (SW7)

STORE — TX PERF MODE (SW6) DX FUNC DUMP/INIT (SW5) →← (SW4)

FUNCTION--MODE — NORMAL SHIFT (SW3)

DATA — NO -1 (SW2) YES +1 (SW1)

CASSETTE / MIDI

SW1(C5-13) SW2(C5-12) SW3(C5-11) SW4(C5-10) SW5(C5-9) SW6(C5-8) SW7(C5-7) SW8(C5-6) SW9(C5-5) SW10(C5-4) SW11(C5-3) SW12(C5-2) DG (C5-1)

(C1-13)SW1 (C1-12)SW2 (C1-11)SW3 (C1-10)SW4 (C1-9)SW5 (C1-8)SW6 (C1-7)SW7 (C1-6)SW8 (C1-5)SW9 (C1-4)SW10 (C1-3)SW11 (C1-2)SW12 (C1-1)DG

Vss (C1-1) VDD (C1-2) Vo(C1-3) RS(C1-4) R/W(C1-5) E(C1-6) D7(C1-7) D6(C1-8) D5(C1-9) D4(C1-10) D3(C1-11)

(GY)

LCD

Address Map

$0000	$001F	$0040	$00FF	$4000	$4800	$5000	$5800	$6000	$6800	$7000	$7800	$7FFF	$C000	$FFFF
CPU Internal Resistor		CPU Internal RAM		Panel Switch	VCA Control	EGS	OPS	RAM 1	RAM 2	RAM 3	RAM 4		ROM	

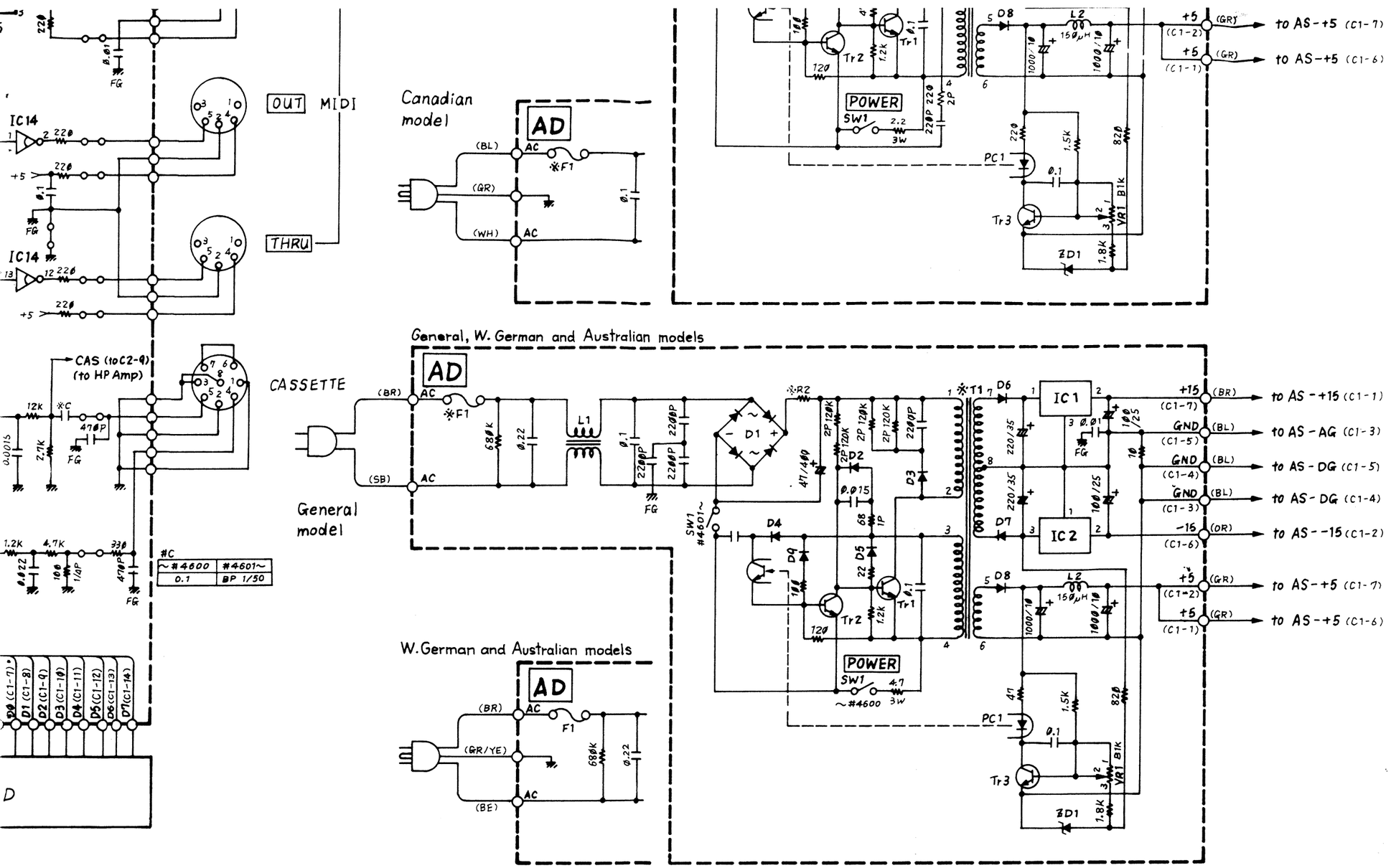

#C	
~#4600	#4601~
0.1	BP 1/50

	※F1	※T1	※R2
Japanese	250V 2A	EI-25 (BJ-6)	10/3W
U.S.	250V 2A ST4	EI-25 (BJ-6)	10/3W
Canadian	250V 2A ST4	EI-25 (BJ-6)	10/2W
General, W.German and Australian	250V T500mA	EI-25 (BE-6)	22/3W

IC14 ;HD7405P (iG105500)
IC15 ;TLP552 (iK000470)
IC16 ;PST518 (iG116200)
IC17,18 ;1R9311 (iG134900)
IC19 ;NJM072 (iG107000)

Tr1 ;2SA1015 (O,Y)
Tr2 ;2SC1815 (Y,GR)

D1,2,4,5 ;1SS133

RM1 ;4.7k ×8
RM2 ;4.7k ×12

9.4265MHz ;Quartz Crystal Unit
500kHz ;Ceramic Oscillator

B1 ;CR2032T (Lithium Battery, 3V)

Notes)
AS Circuit Board

IC20 ;YM21290 (iT212900)
IC21 ;YM21280 (iT212800)
IC22,23 ;T6400 (iG079500)
IC24 ;BA9221 (iG106000)
IC25 ;HD7417P (iG043800)
IC26 ;TC4066BP (iG001270)
IC27 ;TC4016BP (iG001690)
IC28 ;TC40H174P (iG064100)
IC30,32 ;LF356N (iG107100)
IC31,35,36 ;4558DV (iG001390)
IC33,34 ;NJM072 (iG107000)
IC37 ;NJM386 (iG056600)
IC38 ;μPC1252H2 (iG062500)

Tr3 ;2SA1015(O,Y)
Tr4 ;2SC2120(O,Y)

D3 ;1SS133

RY1 ;MZ-12

F1~3 ;Electro Magnetic Interference (0.022μF)

RM1 ;RKC6L103 (6 bit DAC)

Notes)
AD Circuit Board

IC1 ;μPC7815H (iG063900)
IC2 ;μPC7915H (iG077500)

Tr1 ;2SC2555 (J,U,C)
;2SC2792 (G,WR)
Tr2 ;2SC2655
Tr3 ;2SC2634

D1 ;SIRBA40 (J,U,C)
;SIRBA60 (G,WG)
D2 ;ERB4302
D3 ;ERB4406
D4,5,9 ;1SS84
D6,7 ;ERB4402
D8 ;S2K20

ZD1 ;RD6.2EB2

L1 ;PLA3021A (J,U,C)
;R5E203A (G,WG)
L2 ;FL9H151K

PC1 ;PC817 (J,U,C)
;PC511 (G,WG)

•WIRE COLOR ABBREVIATIONS

BE	Blue	RE	Red
BL	Black	SB	Sky Blue
BR	Brown	VI	Violet
GR	Green	WH	White
GY	Gray	YE	Yellow
OR	Orange		

*Schematic diagram is subject to change without notice.

※本回路図は標準回路図です。改良のため予告なく変更することがあります。