ASSEMBLY

For disassembly, follow the reverse procedure.

1 Assemble the stand using four thumb screws.

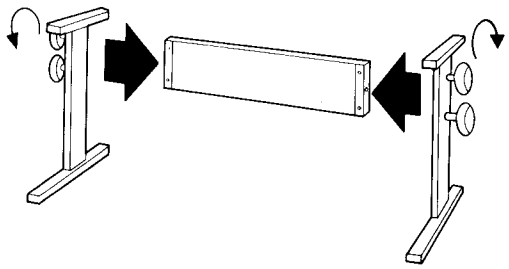

2 Using two thumb screws, firmly secure the stand to the organ in its case.

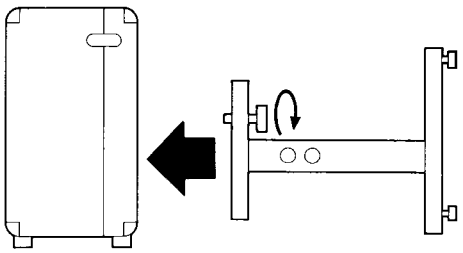

3 Then raise the organ itself.
Adjust bolt Ⓐ to level the stand.

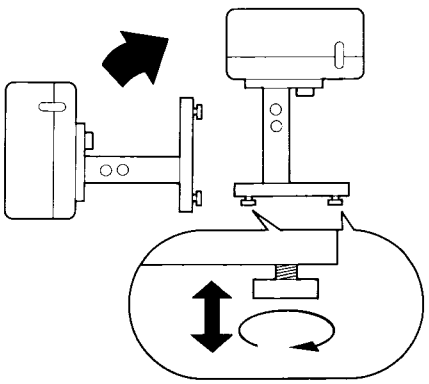

4 Remove the two latches, and take off the organ case.
Remove the music rack from the organ case and set it aside.

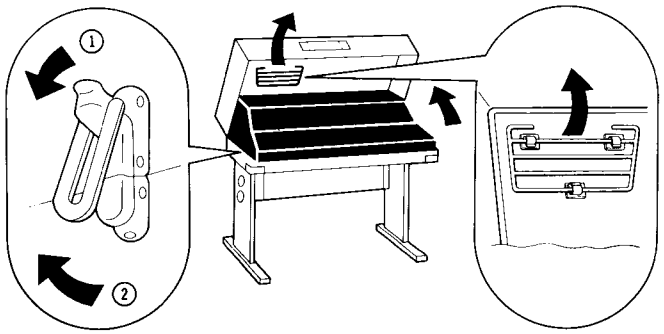

5 Set the pedal keyboard unit in position and insert the music rack.
(Setting the pedal keyboard unit)
Put front groove Ⓐ of the pedal keyboard unit onto front pin Ⓒ of the stand, and push the pedal keyboard unit until back groove Ⓑ fits onto back pin Ⓓ.

- Pull out the foot switch located on the left side of the expression pedal.

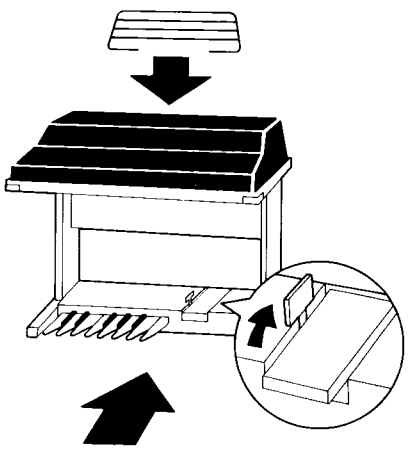

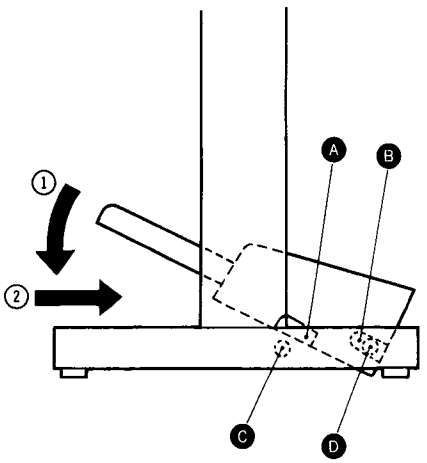

6 Plug the cord from the pedal keyboard unit into the connector of the organ. Also connect the AC cord to the connector of the organ.

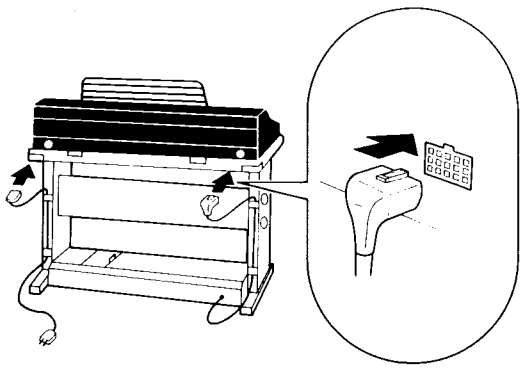

When carrying, pack the pedal keyboard unit, the stand and the AC cord in the carrying bag.

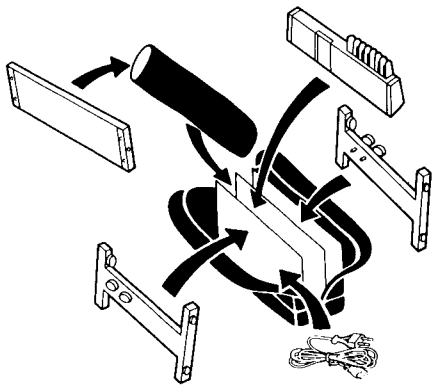

CONNECTION TO TONE CABINET

- This organ is equipped with monitor speakers only. For stage performances, use the SY-T70 exclusively designed tone cabinet.

The following connections are possible depending on the number of tone cabinets in use.

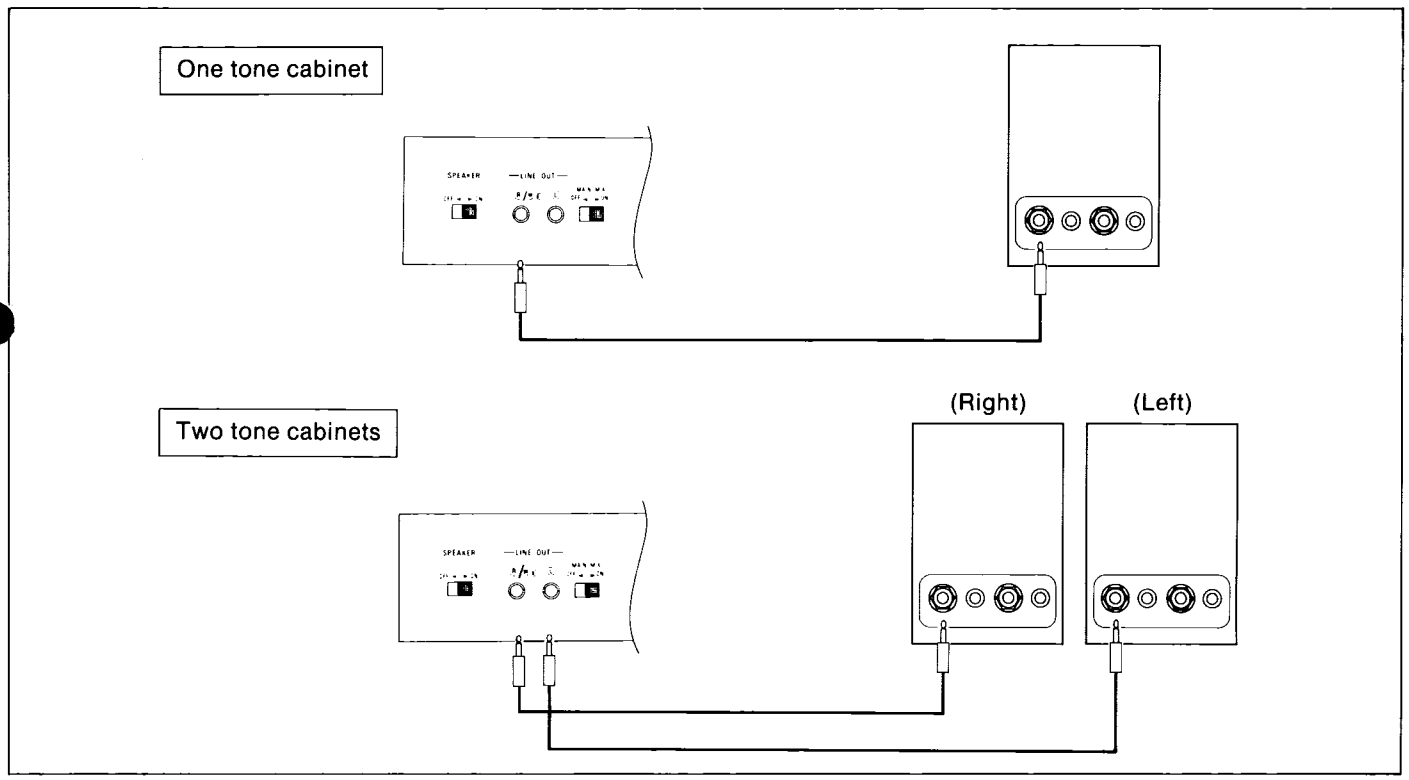

In addition, when the **SEPARATED LINE OUT** terminal is used, the **DRUMS** and **BASS** sounds can be output separately.

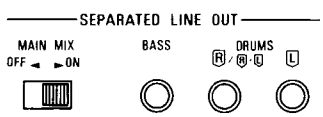

- When the **MAIN MIX** switch is set to **ON**, the **BASS** and **DRUMS** signals are also output from the **LINE OUT** terminal. With **MAIN MIX** set to **OFF**, they are output only from the **SEPARATED LINE OUT** terminal.

OPERATION

Precautions

Secure the organ firmly to the stand by using the thumb screws since it may otherwise come off the stand.

1. The organ and tone cabinet can be connected as above depending on the number of tone cabinets. Make sure that the expression pedal of the organ is set to the minimum position, and the volume controls of the organ and tone cabinet to a slightly lower level.
2. Plug in the power cords of the organ and tone cabinet(s) and turn the power switches ON.
3. With the organ tones set and played, the sound can be heard from the organ and the tone cabinet. First play with low volume and gradually push the expression pedal to increase the volume.

- The sound from the monitor speakers can be turned on and off by the **SPEAKER** switch on the rear panel.

Knee Lever

Read this part together with section ⑩ Sustain Controls in the Owner's Manual.

With the **SUSTAIN** button on, by operating the knee lever located under the keyboards with your right knee, you can quickly turn the sustain on and off during your performance.

Sustain button / Knee lever	Upper/Lower	Special
Raise when not in use 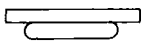	Sustain effective for all **POLY** voices except **ACCORDION**, **TROMBONE**, **CLARINET** and **SAXOPHONE**.	Sustain effective for all **SPECIAL** voices except **FRENCH HORN**, **SAXOPHONE**, **TROMBONE** and **TRUMPET**.
Lower when in use 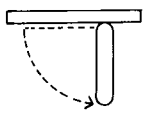	No sustain at work.	No sustain at work.
Operate with the right knee 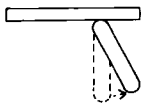	Sustain effective for all **POLY** voices.	Sustain effective for all **SPECIAL** voices.

Program Function Switch

Not only the foot switch, but also the knee lever is available for function storage. (Refer to ㉕ Program Function Switch in the Owner's Manual.)

- Functions for storage
  VOICE SETTING COMPUTER (1~7)
  CHORUS/TREMOLO
  - When **CELESTE** is selected, **CHORUS** and **TREMOLO** cannot be interchanged.

  TECHNI-CHORD
  FILL IN & INTRO (I, II, SOLO)
  ENDING

For Storage

1. Press the **RECORD** button.
2. Press the knee lever to the right.
   - This causes a short beep to sound, and the indicators of the buttons available for recording flash.
3. Press the button of the function you wish to store. This automatically turns the **RECORD** button off and completes storage of the selected function in the knee lever.
   - The stored function is activated only as long as the knee lever is kept pressed to the right.
   - To return the knee lever to the original function (sustain control), press the **INITIAL** key on the lower keyboard instead of the button described in step **3** above.

CONNECTION TERMINALS

(On the rear of the organ)

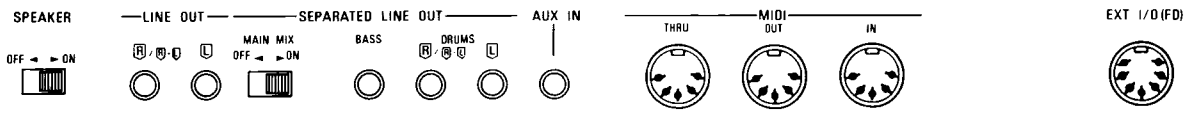

LINE OUT (output level 300 mV, 600Ω)
When using this organ, connect these terminals to the tone cabinet(s). For monaural output, connect to the (R)/(R)+(L) terminal.

SEPARATED LINE OUT
The **BASS** and **DRUMS** can be output independently. When the **MAIN MIX** switch is set to **ON**, the **BASS** and **DRUMS** signals are also output from the **LINE OUT** terminal. With **MAIN MIX** set to **OFF**, the **BASS** and **DRUMS** signals are output only from the **SEPARATED LINE OUT** terminal.

> When not using the **SEPARATED LINE OUT** terminals, be sure the **MAIN MIX** switch is set to **ON**.

AUX (input level 150 mV, 10 kΩ)
Among the many items which can be connected to this terminal are tape/disc pre-amps, portable synthesizers, etc.

MIDI THRU
This terminal transfers MIDI data from the **MIDI IN** terminal directly to other instruments.
For an explanation of the other **MIDI** terminals, refer to the separate MIDI manual.

EXT I/O (FD)
An optional digital disk recorder may be connected to this terminal for the storage of longer music performances or groupings of songs.

SPEAKER
This switch turns the sound from the monitor speakers on and off.

PHONES (∩) (on the right side of the organ)
For silent practice headphones may be used. Because the tone cabinets still play when headphones are used, lower the volume or turn the tone cabinet power off.

HOW TO INSTALL THE DIGITAL DISK RECORDER

If using the optional Digital Disk Recorder SY-FD5, use the included metal shelf to install it as shown in the figures below.

1 Remove the metal shelf from the organ case.

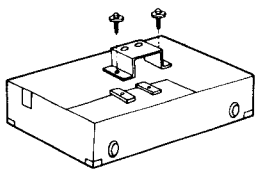

2 Attach the shelf to the organ under the right side.

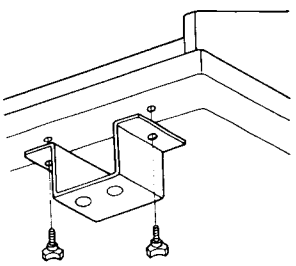

3 Insert the Digital Disk Recorder so that the two front legs fit into the holes in the shelf.

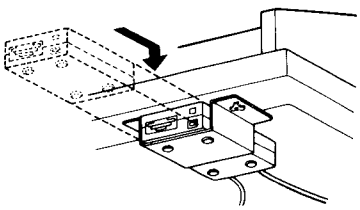

4 Connect the Digital Disk Recorder connector cable to the **EXT I/O (FD)** terminal on the rear of the organ. Connect the power cord to the Digital Disk Recorder.

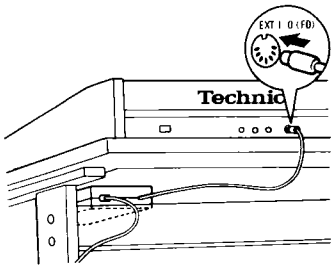

ZUSAMMENBAU

Zum Auseinandernehmen geht man in umgekehrter Reihenfolge vor.

1 Den Ständer mit vier Rändelschrauben zusammenbauen.

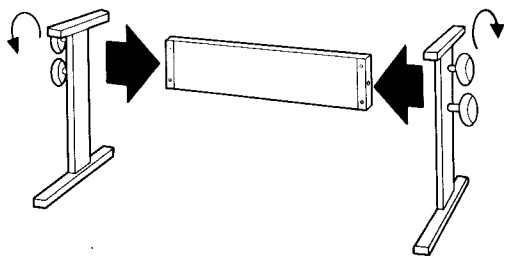

2 Den Ständer mit zwei Rändelschrauben sicher an der Orgel im Kasten befestigen.

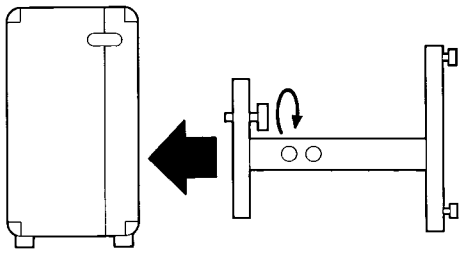

3 Anschließend die Orgel wie gezeigt aufstellen.
Schraube Ⓐ einstellen, um den Ständer auszurichten.

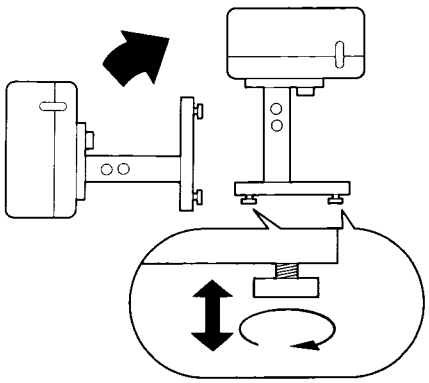

4 Die beiden Sperren öffnen und den Orgelkasten abnehmen. Nehmen Sie das Rack aus dem Orgelkasten.

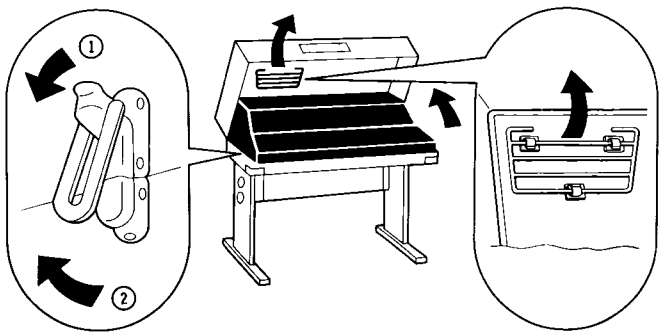

5 Die Pedaleinheit in die richtige Lage bringen und den Notenständer einsetzen.
(Aufstellen der Pedaleinheit)
Die vordere Nut Ⓐ an der Pedaleinheit auf den vorderen Stift Ⓒ des Ständers einpassen und danach die Pedaleinheit so einschieben, daß die hintere Nut Ⓑ auf den vorderen Stift Ⓓ eingepaßt wird.

- Den Fußschalter auf der linken Seite des Schwellers herausziehen.

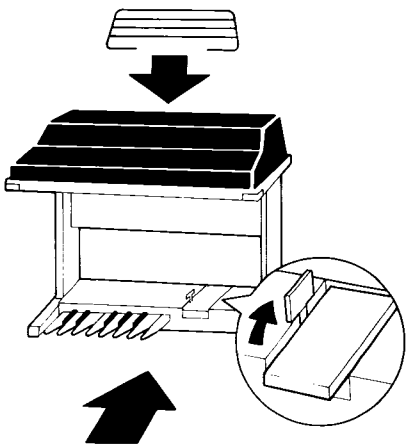

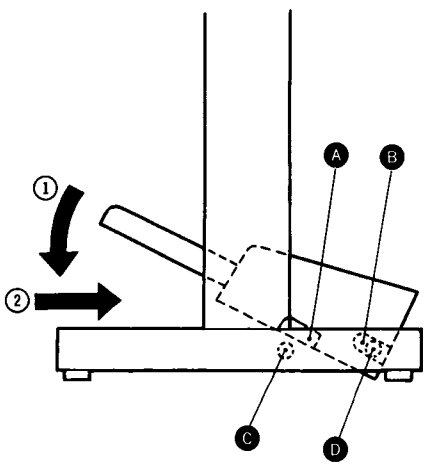

BORNES DE RACCORD

(Sur le panneau arrière du l'orgue)

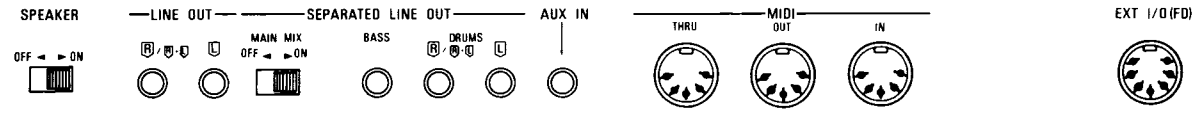

LINE OUT (niveau de sortie 300 mV, 600Ω)
Lorsqu'on joue de cet orgue, brancher ces bornes au(x) cabinet(s) de son. Pour une sortie monoaurale, brancher à la borne R/R+L.

SEPARATED LINE OUT
Les sons de **BASS** et **DRUMS** peuvent être émis séparement. Lorsque l'interrupteur **MAIN MIX** est en position de marche (**ON**), les signaux de **BASS** et **DRUMS** sont aussi émis à la borne **LINE OUT**. Lorsque l'interrupteur **MAIN MIX** est en position d'arrêt (**OFF**), les signaux de **BASS** et **DRUMS** ne sont émis qu'à la borne **SEPARATED LINE OUT**.

> Lorsque la borne **SEPARATED LINE OUT** n'est pas utilisée, veiller à laisser l'interrupteur **MAIN MIX** en position de marche (**ON**).

AUX (niveau d'entrée 150 mV, sur 10kΩ)
Parmi les nombreux items qui peuvent être branchés à cet orgue sont les pré-amplis de magnétophones, synthétiseurs portatifs, etc.

MIDI THRU
Cette borne permet le transfert direct des données MIDI de la borne **MIDI IN** vers les instruments concernés.
Pour toute information concernant les bornes **MIDI**, voir le manuel MIDI séparé.

EXT I/O (FD)
Un digital disk recorder en option peut être branché à ce terminal pour la mise en mémoire de longues performances musicales ou d'un groupe de chansons.

SPEAKER
Cet interrupteur contrôle l'émission ou la coupure des sons aux hauts-parleurs de contrôle de l'orgue.

PHONES ( ) (sur le côté droit de l'orgue)
Pour jouer en toute quiétude et sans gêner votre entourage. En raison du fait que le cabinet de son continue à fonctionner lorsquel'on utilise un casque d'écoute, il est préférable de baisser le son ou de mettre l'interrupteur du cabinet de son sur sa position d'arrêt.

INSTALLATION DE L'ENREGISTREUR DE DISQUES AUDIO-NUMERIQUES

En cas d'utilisation de l'enregistreur de disques audio-numériques SY-FD5 en option, employer l'étagère métallique incluse pour son installation, et procéder comme indiqué dans les schémas ci-après.

1 Retirer l'étagère métallique de l'étui de l'orgue.

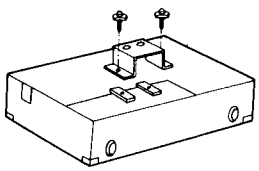

2 Fixer l'étagère à l'orgue, sous le côté droit.

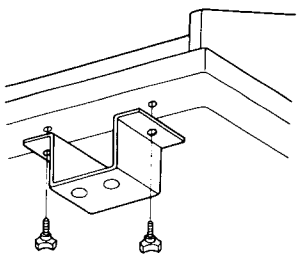

3 Insérer l'enregistreur de disques audio-numériques de sorte que ses deux pieds avant pénètrent dans les trous de l'étagère.

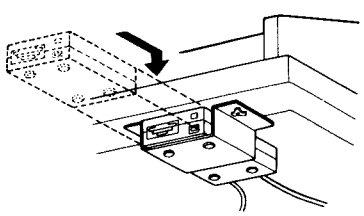

4 Brancher le câble de raccord de l'enregistreur de disques audio-numériques à la borne **EXT I/O (FD)** située à l'arrière de l'orgue. Brancher le cordon d'alimentation à l'enregistreur de disques audio-numériques.

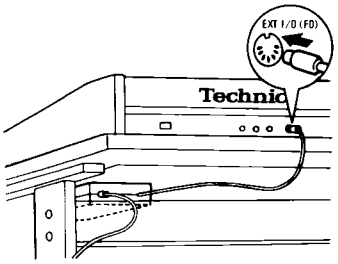

SPECIFICATIONS

KEYBOARD		UPPER MANUAL 44 KEYS, LOWER MANUAL 44 KEYS, PEDAL KEYBOARD 13 KEYS
ONE TOUCH PLAY		○
FULLBAND SETTING COMPUTER		FSC, RECORD*
PLAY SEQUENCER		BASS, LOWER, UPPER, SOLO, RECORD*
VOICE SETTING COMPUTER		SET, 1~7, CANCEL, 16×2 COMBINATION (RHYTHM)
ORCHESTRAL CONDUCTOR		UPPER...3, LOWER...3
UPPER TONES	POLY	PIANO, ELECTRIC PIANO, HARPSICHORD, CLAVI, JAZZ GUITAR, HAWAIIAN GUITAR, SYNTHE, ACCORDION, TROMBONE, CLARINET, STRINGS, SAXOPHONE, ORGAN (RECORD*, 10 ORGAN PRESETS), TAB VOICES (FLUTE 16', 8', 4', 2'), VOLUME
	SPECIAL	PIANO, ELECTRIC PIANO, HARPSICHORD, CLAVI, JAZZ GUITAR, GUITAR, SYNTHE, FRENCH HORN, SAXOPHONE, TROMBONE, TRUMPET, VIBRAPHONE, VOLUME
	SOLO	FLUTE, PAN FLUTE, SYNTHE, CLARINET, SAXOPHONE, TROMBONE, TRUMPET, VIOLIN, VOLUME
LOWER TONES	POLY	PIANO, ELECTRIC PIANO, HARPSICHORD, SYNTHE, JAZZ GUITAR, TROMBONE, STRINGS, SAXOPHONE, ORGAN (RECORD*, 10 ORGAN PRESETS), TAB VOICES (FLUTE 8', 4', 2'), VOLUME
	SPECIAL	○ (U/L)
	SOLO	○ (U/L)
BASS TONES		BASS 16', BASS 16'+8', BASS 8', SYNTHE BASS, ACOUSTIC BASS, CHOPPER BASS, ELECTRIC BASS, TUBA, VOLUME
SUSTAIN		UPPER, U&L SPECIAL, LOWER, BASS, KNEE LEVER
EFFECT		CHORUS, TREMOLO, CELESTE, UPPER POLY, U&L SPECIAL, U&L SOLO, LOWER POLY
REVERB		CONTROL
GLIDE		FOOT SWITCH
TECHNI-CHORD		ON, CLOSE/PROGRAM, RECORD*
RHYTHM (SELECTORS)		MARCH, BALLAD, 8 BEAT, CHA-CHA, RHUMBA, JAZZ WALTZ, WALTZ, TANGO, SAMBA, BOSSA NOVA, DISCO I, II, 16 BEAT, SALSA, SWING, SHUFFLE
(CONTROLS)		SYNCHRO & BREAK, START/STOP, DRUMS VOLUME, TEMPO
FILL IN & INTRO		I, II, SOLO
ENDING		ON
BASS & ACCOMP		I, II, MELODIC, VOLUME
PLAY MODE		PCC, FINGERED, MEMORY
PROGRAM CHORD COMPUTER		PCC, RECORD*, , , , , , , D.S., , , (LOWER KEYBOARD)
TRANSPOSE		CONTROL (G ~ C ~ F♯)
TUNING		○
PROGRAM FUNCTION SWITCH		FOOT SWITCH, KNEE LEVER, RECORD*
MODE SET		MODE SET, RECORD*, MIDI CLOCK, START/STOP, SONG SELECT, SUSTAIN, EFFECT, P. CHANGE, OCTAVE, MEDLEY
OTHERS		POWER SWITCH, MAIN VOLUME, EXPRESSION PEDAL, HEADPHONE JACK, INPUT JACK, LINE OUT JACKS (R/R+L , L), SEPARATED LINE OUT JACKS (RHYTHM [R/R+L, L], BASS), MAIN MIX SWITCH, EXT I/O (FD) TERMINAL, MIDI TERMINALS (IN, OUT, THRU), PEDAL IN, AC CORD INPUT, SPEAKER SWITCH, INITIAL KEY (LOWER KEYBOARD)
MONITOR OUTPUT		10 W
MONITOR SPEAKERS		6 cm × 13 cm ×2
POWER REQUIREMENT		70 W
		AC 120V 60 Hz (NORTH AMERICA) AC 120/220/240V 50/60 Hz
CABINET (W×H×D)		113.2 cm × 91.1 cm × 45.8 cm (44-9/16" × 35-7/8" × 18-1/32")
NET WEIGHT (SET UP FOR PLAY)		36.3 kg (80.0 lbs.)
(BODY IN CASE)		28.5 kg (62.8 lbs.)
(PEDAL & STAND IN BAG)		18 kg (39.7 lbs.)

*Common RECORD button is used for these buttons.

Bescheinigung des Herstellers/Importeurs

Hiermit wird bescheinigt, daß der/die/das

TECHNICS, Model No. SX-C300

(Gerät, Typ, Bezeichnung)

in Übereinstimmung mit den Bestimmungen der

Vfg 1046 / 1984

(Amtsblattverfügung)

funk-entsört ist.
Der Deutschen Bundespost wurde das Inverkehrbringen dieses Gerätes angezeigt und die Berechtigung zur Überprüfung der Serie auf Einhaltung der Bestimmungen eingeräumt.

PANASONIC DEUTSCHLAND GMBH

Name des Herstellers/Importeurs