MANUAL NO. 993-045394-002

TECHNICAL SERVICE INFORMATION for

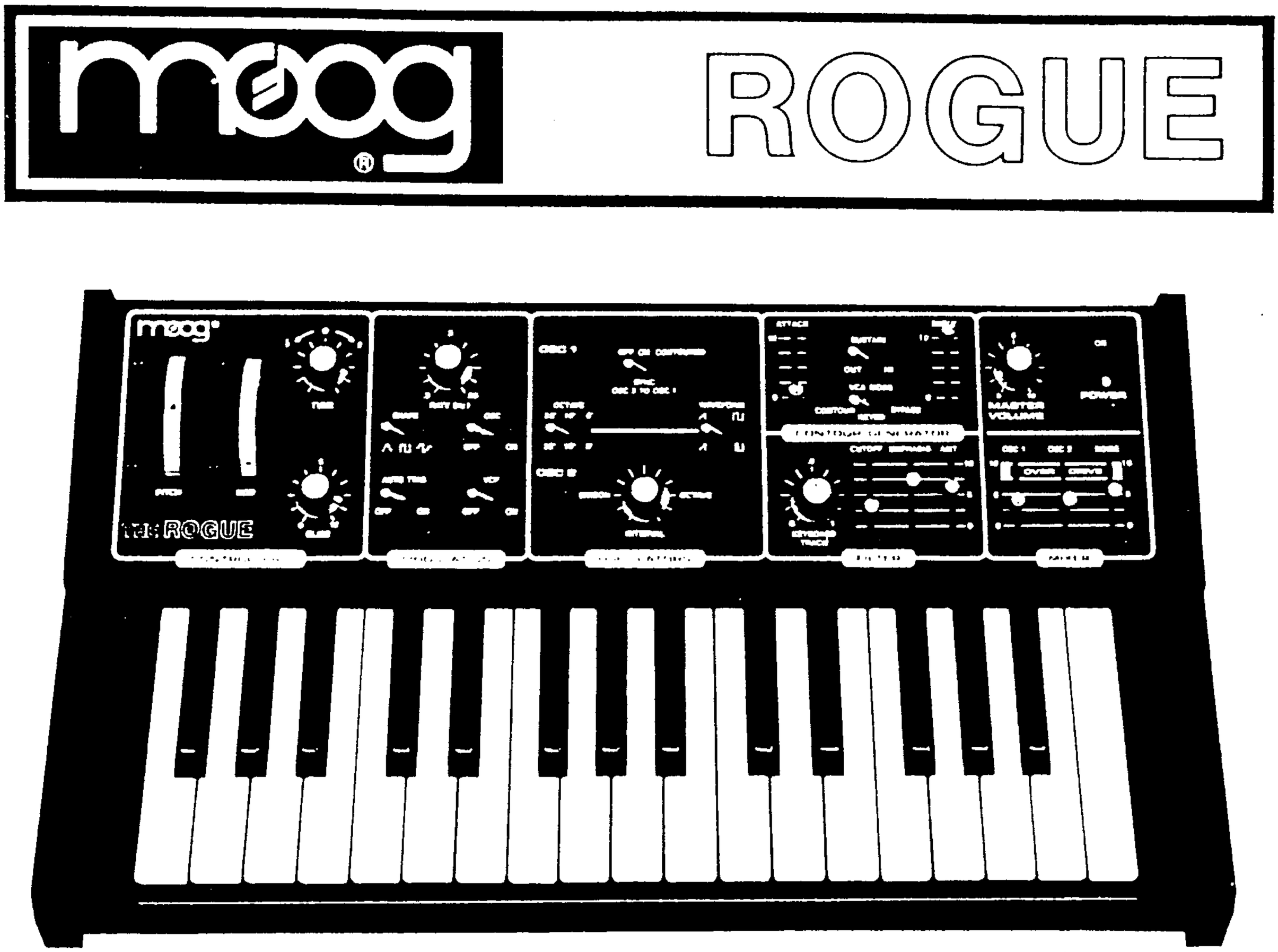

MODEL 342A

CAUTION

These servicing instructions are for use by qualified personnel only. To avoid risk of electric shock, do not perform any servicing other than that described in the Owner's Manual unless you are qualified to do so. Refer all servicing to qualified service personnel.

MOOG MUSIC INC.
2500 Walden Avenue, Buffalo, New York 14225

MOOG MUSIC
p.a Waalhaven Zuid Zijde 48, 3088 HJ Rotterdam, The Netherlands

These drawings and specifications are the property of Moog Music Inc., and shall not be reproduced or copied in whole or in part as the basis for manufacture or sale of the items.

COPYRIGHT — 1981
MOOG MUSIC INC.

REF DESIG	DESCRIPTION	PART NO.
C7, C14, C24, C39, C40	Capacitor, Alum. Elect., 10ufd, 25V	945-044465-003
C13, C24	Capacitor, Low Leakage, Alum. Elect., 6.8ufd, 16V	945-045049-001
C28	Capacitor, Alum. Elect., 220ufd, 6.3V	945-040209-003
C37, C38	Capacitor, Alum. Elect., 1000ufd, 35V	945-040209-011
R13	Resistor, Rotary, Audio, 1 Meg	925-045012-004
R16, R24, R72, R97, R139	Resistor, Carbon Trim, Vertical Mount, 10K	925-045364-001
R43	Resistor, Rotary, Rev. Audio, 1 Meg	925-045012-005
R48, R54	Resistor, Cermet Trim, Vertical Mount, 500Ω	925-042526-006
R155	Resistor, Cermet Trim, Vertical Mount, 100K	925-042526-005
R51, R58	Resistor, Cermet Trim, Vertical Mount, 10K	925-042526-003
R53, R56	Resistor, 1 Watt +/- 1%, Temp. Comp., 100Ω	924-040183-002
R66, R68, R120	Resistor, Slide, Linear, 10K	925-045013-001
R70, R86	Resistor, Rotary, Linear, 10K	925-045012-001
R103, R104	Resistor, Slide, Audio, 1 Meg	925-045013-002
R116, R118	Resistor, Slide, Linear, 10K	925-045013-001
R129	Resistor, Slide, Audio, 50K	925-045013-004
R148	Resistor, Rotary, Audio, 10K	925-045012-003
	Socket, Component Lead	906-045374-001
	Socket, 7 Pin, SIL	906-040307-007
	Heat Sink	967-040935-001
J1, J2	Jack, Phone, 2 Circuit, Switchcraft 111	910-041306-004
J3	Jack, Phone, Ins. 2 Circuit, Switchcraft N-112	910-041306-007
J4	Jack, Phone, Ins. 2 Circuit, Switchcraft N11	910-041306-006
J5	Jack, Miniature	910-045371-001
SW1, SW2, SW5, SW7, SW8, SW10	Switch, Lever, 2P2T	960-045214-001
SW3, SW4, SW6, SW9	Switch, Lever, 2P3T	960-045216-001
U1	IC, Dual Operational Amplifier, Special, LF353	991-042908-002
U2, U4, U5, U12, U17	IC, Dual Operational Amplifier, 4558	991-041146-001
U3	IC, Noise Generator, 5837	991-042016-001
U6, U15	IC, Dual Operational Amplifier, LF353	991-042908-001
U7, U14	IC, Trans Array, 3046	991-041104-001
U8, U10	IC, Operational Amplifier, LF351	991-042739-001
U9, U11	IC, Dual Voltage Comparator, LM393	991-042388-001
U13	IC, CMOS, Dual Complementary Pair plus Inverter, 4007	991-041086-001
U16	IC, Operational Amplifier, 3080A	991-041089-001
U18	IC, +12 Volt Regulator, 78M12	991-041112-002
U19	IC, -12 Volt Regulator, 79M12	991-044316-001
Q1, Q14, Q16	Transistor, NPN, 2N3904	991-041051-002
Q2, Q5, Q6, Q15	Transistor, PNP, 2N3906	991-041052-002
Q3, Q4	Transistor, N-Channel FET, U3078	991-042659-001

MECHANICAL REPLACEMENT PARTS LIST

REF DESIG	DESCRIPTION	PART NO.
	P.C. Board Assembly, Main	996-045367-001
	Keyboard, 32 Note	979-044123-940
	White Key C	964-044471-001
	White Key D	964-044471-002
	White Key E	964-044471-003
	White Key F	964-044471-004
	White Key G	964-044471-005
	White Key A	964-044471-006
	White Key B	964-044471-007
	White Key, High C	964-044471-008
	Black Key	964-044472-001
	Spring No. 7	975-044473-001
	Switch Unit No. 6	960-044474-001
	Switch Unit No. 7	960-044474-002
	Damper 9B	914-044475-001
	Damper 8B	914-044475-002
S1	Connector, CIS, Socket Housing, 5 Pin	906-040298-005
S2	Connector, CIS, Socket Housing, 6 Pin	906-040298-006
	Seal, Foam, Front Panel, Left	914-045372-001
	Seal, Foam, Front Panel, Right	914-045373-001
	Grommet, Power Plug	977-045386-001
	Wheel Assembly	997-041597-001
	Detent, Spring	961-041178-001
	Detent, Teflon	962-041179-001
	Knob, Slide Pot, Assembly, Blue Insert	915-040272-951
	Knob Assembly, Skirted, Clear Spun Aluminum	915-042764-943
R161	Resistor, Rotary Control, MOD WHEEL, 10K, Special Taper	925-040269-001
R160	Resistor, Rotary Control, PITCH WHEEL, Linear, 10K	925-040930-003
	Cabinet Assembly	967-045358-940
	Base	967-045359-001
	Foot, Rubber, 7/8 in. dia. x 3/8	916-042584-001
	Transformer, Plug-In, 120V, 50/60Hz	935-045370-001
	Transformer, Plug-In, 220V, 50/60Hz	935-045385-001
	Owner's Manual	993-045375-001
	Shipping Carton	932-045360-001

PRINTED CIRCUIT BOARD ASSEMBLY SELECTED REPLACEMENT PARTS LIST

REF DESIG	DESCRIPTION	PART NO.
L1	LED, Red, High Intensity	939-041850-004
CR1, CR5, CR6, CR7, CR10	Diode, Signal, 1N4148	919-041075-001
CR2	Diode, Zener, 8.2 Volt, 1N5237A	919-041349-004
CR3, CR4	Diode, Low Leakage, FDH333	919-044466-001
CR8, CR9	Diode, Rectifier, 1N4004	919-042019-001

OSC 2 & NOISE LEVEL, R118 & R120	Minimum
FILTER CUTOFF, R68	Maximum
FILTER EMPHASIS, R129	Minimum
FILTER CONTOUR AMT, R66	Minimum
VCA MODE, SW9	Bypass
OSC SYNC, SW6	Off
OCTAVE, SW4	32'
OSC WAVEFORM, SW7	Sawtooth
OSC 2 INTERVAL, R86	Unison
OSC, VCF MODE, SW2, SW5	Off
TUNE, R16	Centered
PITCH WHEEL, R160	Centered

Center the following trimpots:
"Range 1 Trim" R58
"Scale 1 Trim" R54
"Osc 1 Hi-End Trim" R97

Monitor the audio output frequency at the AUDIO OUT jack J5.

Depress and hold low A. Using "Range 1 Trim" R58, adjust OSC 1 for 55Hz.

Depress and hold high A. Using "Scale 1 Trim" R54, adjust OSC 1 for 220Hz.

Repeat two previous steps until a perfect two octave spread is obtained.

Change OCTAVE switch SW4 to 8'.

Depress and hold low A. Adjust "Octave Trim" R155 or 220Hz.

Depress high A and adjust "Hi-End Trim" R97 for 880Hz.

Repeat two previous steps until a perfect two octave spread is obtained.

Repeat above steps as required until tuning is satisfactory on all ranges.

OSCILLATOR 2 SCALE, FREQUENCY AND HI END ADJUSTMENTS

Set the controls as in OSC 1 tune up procedure except as indicated below:

OSC 1 LEVEL, R116	Minimum
OSC 2 LEVEL, R118	Maximum

Center the following trimpots:
"Range 2 Trim" R51
"Scale 2 Trim" R48
"Osc 2 Hi-End Trim" R72

Monitor the audio output at the AUDIO OUT jack, J5.

Depress and hold low A. Using "Range 2 Trim" R51, adjust OSC 2 for 55Hz.

Depress and hold high A. Using "Scale 2 Trim" R48, adjust OSC 2 for 220Hz.

Repeat two previous steps until a perfect two octave spread is obtained.

Change OCTAVE switch SW4 to 8'.

Depress and hold low A and adjust "Range 2 Trim" R51 for 220Hz.

Depress and hold high A and adjust "Osc 2 Hi-End Trim" R72 for 880Hz.

Repeat two previous steps until a perfect two octave spread is obtained.

Repeat above steps as required until tuning is satisfactory on all ranges.

VCA BALANCE ADJUSTMENTS

Set the following controls:

MASTER VOLUME, R148	Maximum
OSC 1 LEVEL, R116	Minimum
OSC 2 LEVEL, R118	Minimum
NOISE LEVEL, R120	Minimum
VCA MODE, SW9	Keyed
FILTER CUTOFF, R68	Maximum
FILTER EMPHASIS, R129	Minimum
FILTER CONTOUR AMT, R66	Minimum
MODULATION RATE, R43	30
AUTO TRIG, SW1	On

Monitor at the AUDIO OUT jack J5.

Adjust "VCA Trim" R139 for minimum output level.

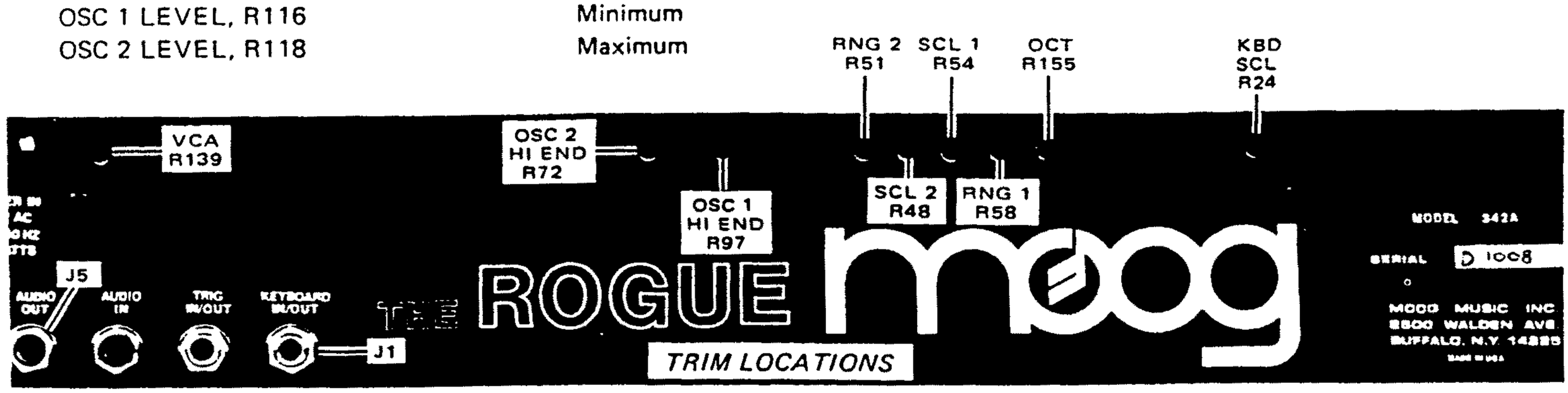

> **NOTE**
>
> All adjustments may be accomplished WITHOUT disassembly and are accessible through the rear panel holes using a 1/8-inch (3mm) screw driver. DO NOT use excessive force when inserting screw driver or damage to trim pot may result.

DISASSEMBLY PROCEDURE

> **NOTE**
>
> Before proceding with disassembly, take care to protect finished plastic and metal parts from sharp objects. Use carpeted or similarly protected surface.

REMOVING BASE

Base removal is accomplished by removing four (4) self tapping screws on the bottom of the unit and one (1) sheet metal screw on the rear panel.

REMOVING CONTROL BOARD 1 AND POWER SUPPLY BOARD 2

Remove all rotary and slide pot knobs. Remove the four (4) 3/8 nuts and finishing washers from the phone jacks on the rear panel. Release Board 2 from the rear panel. Remove the three (3) screws securing the front of Board 1 to housing. Remove the three (3) screws from the rear panel which secure the printed circuit board guide.

Remove P.C. Boards 1 and 2 together. Disconnect keyboard and left hand control connectors. Reconnect prior to reassembly of P. C. Boards into housing.

> **NOTE**
>
> During assembly, the switch levers must be placed in a mechanically centered position to clear the front panel mounting holes. This center position may be unrelated to the actual switch operating positions. Board 1 and Board 2 are hard wired together; avoid excessive flexing of wire solder connections.

REMOVING KEYBOARD

This is accomplished by removing connector to Control Printed Circuit Board 1 and removing the four (4) screws securing the keyboard frame and mounting brackets in place through the base plate. Separate the keyboard from the base. Place keyboard face down, using cushioning material to protect the keys.

REMOVING KEYS

Keys may be removed with the keyboard in the cabinet if replacement becomes necessary.

Depress key at the hole in the aft key surface. This will permit the rear notches in the key to disengage from the rear bracket. Retain pressure on key at this point, pull forward and release.

Push back and down on front end of key. This will disengage the key hook from its mounting, permitting removal. A compression spring is mounted on a boss on the key and can be lifted out.

To replace the key, engage the forward hook on the key in the bracket, press rear end of key to depress compression spring and move key to the rear until the notches on the key engage the rear bracket.

REMOVING KEYBOARD SWITCHES

In order to remove the switch assembly, the keyboard must be removed from the base as described above.

Remove mounting screws from the switch assembly on the bottom of the keyboard. Remove the rear mounting brackets and the switch assembly.

REMOVING SIDE MOTION AND KEY CONTACT GASKETS

Remove screws from front finger bracket on the keyboard and separate bracket from its mount.

Side motion gaskets on the finger bracket are rubber. Remove by pulling out from finger bracket.

With key removed, the key contact gasket is removed by pulling it away from key.

ALIGNMENT PROCEDURE

All trim adjustments can be made without opening the unit. This is done by using the trimpot access holes, the KEYBOARD IN/OUT jack and the AUDIO OUT jack which are located on the back of the unit. Allow unit to warm up for about 15 minutes before making these adjustments.

KEYBOARD SCALE ADJUSTMENT

Set GLIDE control R13 at minimum.

Use DVM to monitor voltage at the tip of the KEYBOARD IN/OUT jack J1.

Alternately depress low F and high C keys.

Adjust "Keyboard Scale Trim" R24 for a 2.58 VDC difference to achieve a 1 volt/octave scale factor.

OSCILLATOR 1 SCALE, FREQUENCY AND HI END ADJUSTMENTS

Set the following controls:

MASTER VOLUME, R148	Maximum
OSC 1 LEVEL, R116	Maximum

SPECIFICATIONS

> **NOTE**
>
> All specifications are typical and may vary slightly from unit to unit.

POWER REQUIREMENTS

Operating Voltage Input to Instrument	24 volts AC nominal, 28 volts AC maximum; 50-60 Hertz
Power Consumption	6 watts

CONTROLLERS

Keyboard	32 note (F to C)
GLIDE control	Linear, continuously variable from 5 msec to 2.3 sec
TUNE Control	+/- 3 semitones
MODULATION RATE Control	.3Hz to 31Hz
MODULATION SHAPE Switch	Triangle, Square or Sample and Hold
OSC MODULATION Amount	Zero to 18 semitones
VFC MODULATION Amount	Zero to 4 octaves
PITCH WHEEL Range	+/- 7 semitones

OSCILLATORS

Reference frequency for Low F (Octave = 32')

OSC 1	43.65Hz
OSC 2	43.65Hz

WAVEFORMS

OSC 1	Sawtooth and 50% duty cycle; Square wave
OSC 2	Sawtooth and 85% duty cycle; Pulse wave

OCTAVES

OSC 1 and OSC 2	32', 16', 8'
SYNC OSC 2 TO OSC 1, ON	Locks the fundamental frequency of OSC 2 to OSC 1; INTERVAL control sweeps OSC 2 four octaves
SYNC OSC 2 TO OSC 1, CONTOURED	Locks the fundamental frequency of OSC 2 to OSC 1; Contour envelope sweeps OSC 2 through the CONTOUR AMT Control (four octaves)
OSC 2 INTERVAL Control	16 semitones

CONTOUR GENERATOR

ATTACK Time

Minimum	4 milliseconds
Maximum	6 seconds

DECAY Time

Minimum	10 milliseconds
Maximum	20 seconds
Sustain Level at U12B with Key depressed and SUSTAIN Switch IN	4.8 volts

VOLTAGE CONTROLLED FILTER (VCF)

Type: Patented 24dB/octave low pass filter

KEYBOARD TRACKING	Zero to 100% of keyboard control voltage effects the filter cutoff
Regeneration Frequency with FILTER CUTOFF Control centered, KEYBOARD TRACKING min., CONTOUR AMT min.	740Hz
Range of FILTER CUTOFF Control	11 octaves
FILTER CONTOUR AMT Range	6.3 octaves

VOLTAGE CONTROLLED AMPLIFIER (VCA)

(All outputs measured at AUDIO OUT)

OSC 1 Sawtooth	- 2dB
OSC 2 Sawtooth	- 2dB
NOISE	+6dB

REAR PANEL I/O

KEYBOARD IN	1 volt per octave
KEYBOARD OUT	1 volt per octave
S-TRIGGER IN	Short to ground triggers CONTOUR GENERATOR
S-TRIGGER OUT	Shorts J2 pin 5 to ground when key is depressed
V-TRIGGER IN	+3 to 10 volt gate triggers CONTOUR GENERATOR
V-TRIGGER OUT	+10 volts when key is depressed
AUDIO IN	Signal is processed by VCF and VCA; 18K input impedance

SIGNAL TO NOISE RATIO

Bleedthrough (all levels down, MASTER VOL max)	50dB

WEIGHTS AND DIMENSIONS

Synthesizer Dimensions	21" wide x 12-1/2" deep x 5-1/4" high (53cm x 32cm x 13cm)
Synthesizer Weight	11 pounds (5kg)
Carton Dimensions	23-1/8" long x 14" wide x 6-1/4" high (59cm x 36cm x 59cm)
Shipping Weight	14 pounds (6.3kg)

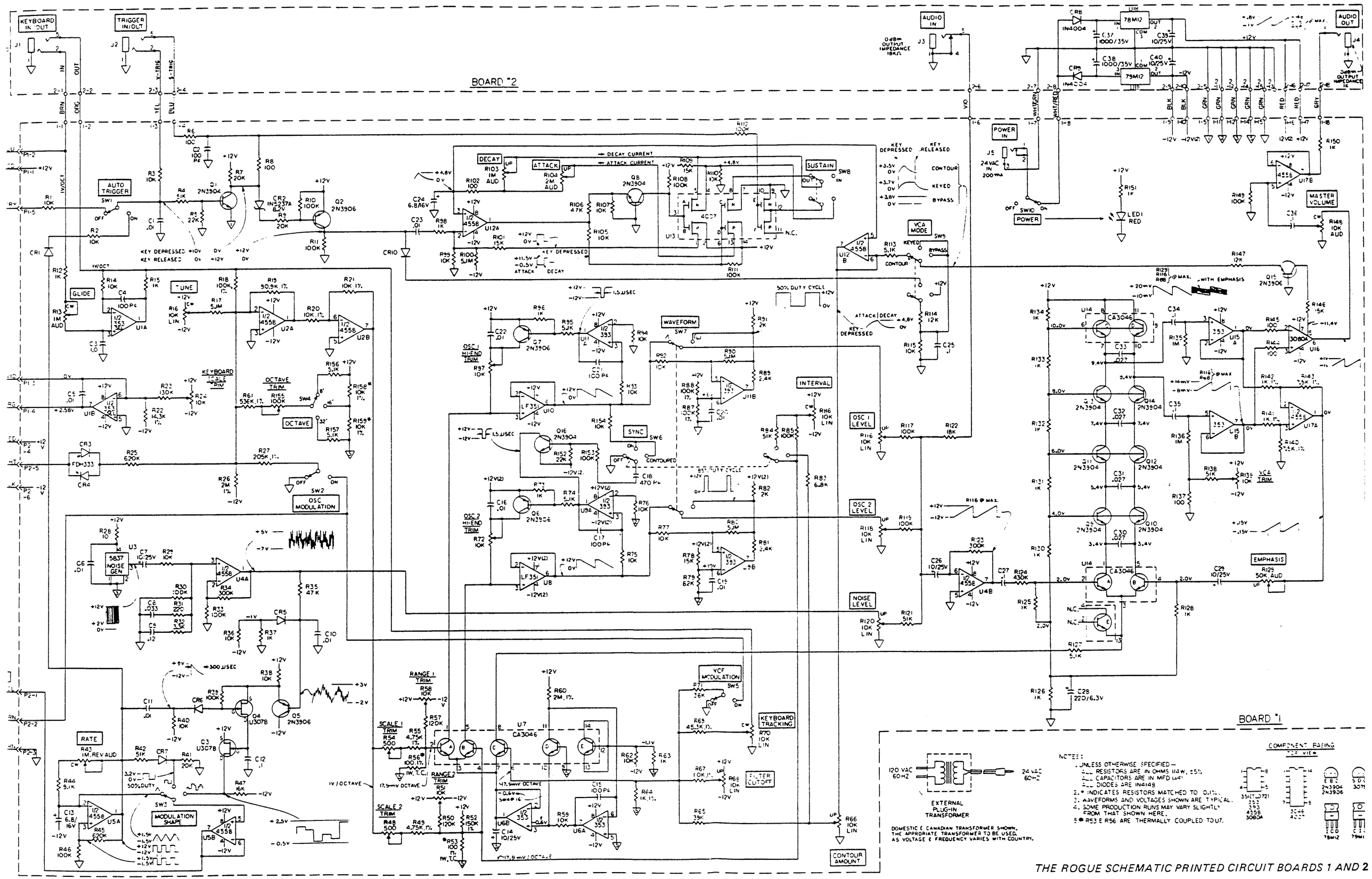

THE ROGUE SCHEMATIC PRINTED CIRCUIT BOARDS 1 AND 2